Maintenance Manual

KONGSBERG

M3 Sonar®

Multibeam sonar

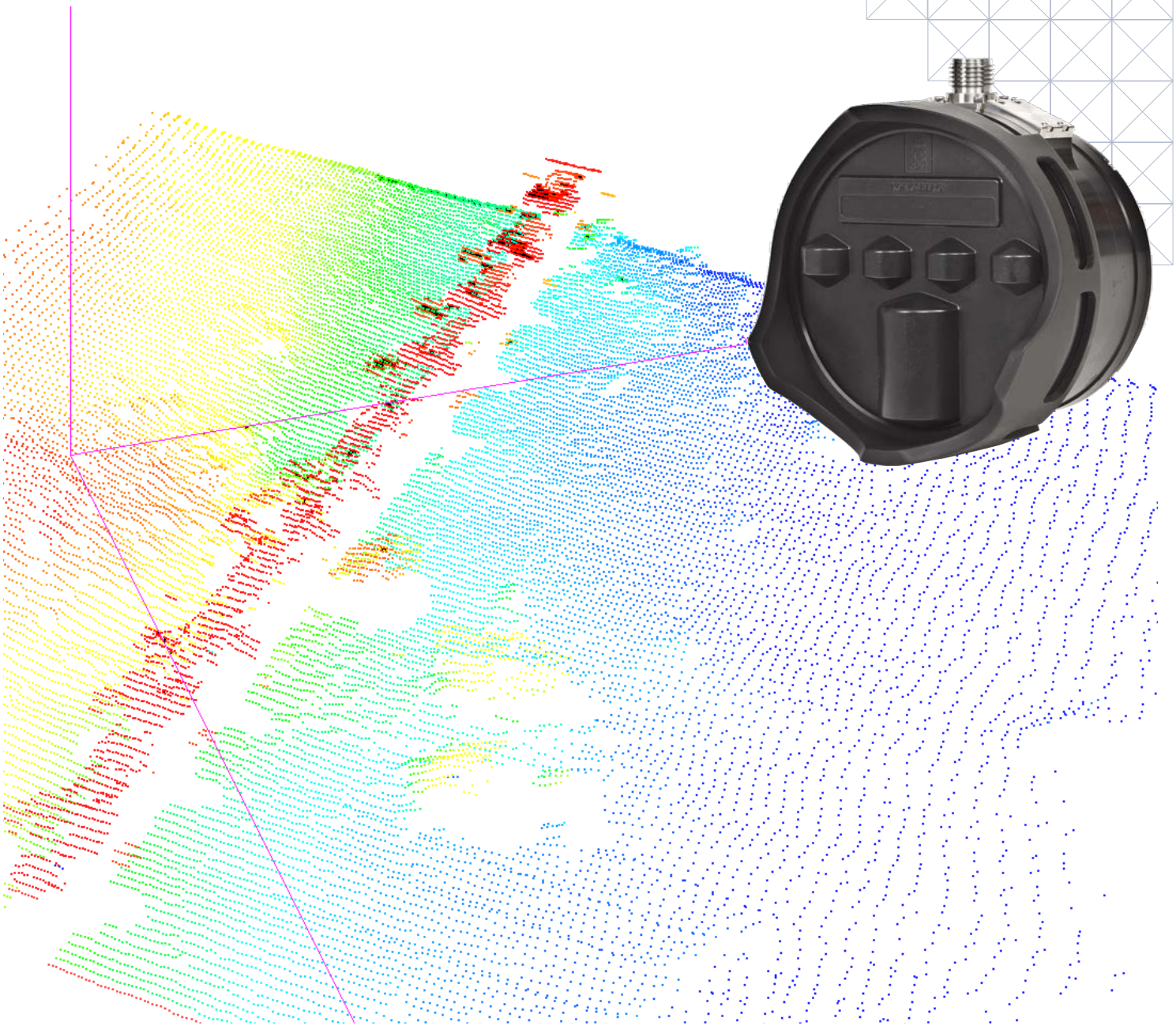

KONGSBERG

M3 Sonar

Multibeam sonar

Maintenance Manual

Release 1.3

The purpose of this manual is to present the descriptions and drawings required to do basic maintenance tasks on the Kongsberg M3 Sonar Multibeam sonar.

For more information about the practical use of the M3 Sonar, as well as detailed information about the functions and dialog boxes provided, refer to the M3 Sonar *Reference Manual*.

922-20007031/1.3

May 2020 © Kongsberg Mesotech Limited

Document information

- **Product**: Kongsberg M3 Sonar
- **Document**: Maintenance Manual
- **Document number**: 922-20007031
- **Revision**: 1.3
- **Date of issue**: 22 May 2020

Copyright

The information contained in this document remains the sole property of Kongsberg Mesotech Limited. No part of this document may be copied or reproduced in any form or by any means, and the information contained within it is not to be communicated to a third party, without the prior written consent of Kongsberg Mesotech Limited.

Warning

The equipment to which this manual applies must only be used for the purpose for which it was designed. Improper use or maintenance may cause damage to the equipment and/or injury to personnel. You must be familiar with the contents of the appropriate manuals before attempting to operate or work on the equipment.

Kongsberg Mesotech disclaims any responsibility for damage or injury caused by improper installation, use or maintenance of the equipment.

Disclaimer

Kongsberg Mesotech Limited endeavours to ensure that all information in this document is correct and fairly stated, but does not accept liability for any errors or omissions.

Support information

If you require maintenance or repair, contact your local dealer. You can contact us by phone at +1 604 464 8144, or by email at: km.support.vancouver@km.kongsberg.com. If you need information about our other products, visit http://www.km.kongsberg.com/mesotech. On our website you will also find a list of our dealers and distributors.

Table of contents

ABOUT THIS MANUAL 7
M3 SONAR 8
System description 9
System diagram 10
System units 11
Sonar Processor 12
Power supply 12
Sonar Head 13
General safety rules 14
Maintenance philosophy 15
Support information 16
TROUBLESHOOTING 17
Tools for troubleshooting 18
Output Messages window 19
Log files 20
Connection status window 21
Head status window 22
Failure detection 24
Sonar Head connection failure detection 25
General fault finding 27
Troubleshooting procedures 32
Starting operation of the Sonar Head 33
Troubleshooting a failure to display targets 34
Troubleshooting reduced profiling performance 38
Making sure that all M3 Sonar cables are properly connected 42
Testing the Sonar Head telemetry 43
Defining the IP address on the Sonar Processor network adapter 46
Upgrading the Sonar Head 47
Changing the Sonar Head IP Address 49
PREVENTIVE MAINTENANCE 52
Preventive maintenance schedule 53
Personnel for preventive maintenance tasks 56
Inspecting and cleaning the display 56
Inspecting and cleaning the Sonar Processor 57

Inspecting and cleaning the Sonar Head 58
Installing the Guard Ring and protective cover 59
Inspecting and cleaning the SEA CON® cable connectors 62
Inspecting and cleaning the SubConn® cable connectors 64
Cleaning marine growth off the Sonar Head 66
Painting the Sonar Head 68
Inspecting and replacing the sacrificial anodes 70
Approved anti-fouling paints 73
CORRECTIVE MAINTENANCE 75
Replacing the o-ring in the sonar cable connector 76
Replacing the retaining ring in a dummy plug 81
Splicing the M3 Sonar cable 84
SPARE PARTS AND CONSUMABLES 103
Ordering spare parts 104
Spare parts categories 104
List of spare parts 105
Sonar Head 105
Cables 106
Power supply 108
Tools and consumables 109
Mounting brackets 110
CABLE LAYOUT AND INTERCONNECTIONS 111
Read this first 112
Cable plan 113
List of M3 Sonar cables 114
Focal multiplexer compatibility table 115
Cable drawings and specifications 116
Ethernet cable 117
Sonar Head - SEA CON MINK-10-CCPL: Power and Ethernet 118
Sonar Head - SEA CON MINK-10-CCPL:Power, Ethernet, 1PPS, and Sync 118
Sonar Head - SEA CON MIND-4-CCP: Synchronization 119
Sonar Head - SeaNet: Power and Telemetry 119
Sonar Head - SEA CON MINK-10-CCPL: Power, Ethernet 10/100, and VDSL 120
Sonar Head - SubConn MCOM6F: Power and Ethernet 120
Sonar Head - SubConn DIL13F: Power and Ethernet 121
Sonar Head - SubConn MCIL8F: Power and Ethernet 121

Basic cable requirements 123
Ethernet cable installation 124
Radio frequency interference 125
Physical protection of cables 125
Grounding of system cables 126
Cable connections and terminations 126
DRAWING FILE 127
About the drawings in the drawing file 127
500 m Sonar Head outline dimensions 128
4000 m Sonar Head outline dimensions 131
Sonar Head with integrated sound speed sensor outline dimensions 134
TECHNICAL SPECIFICATIONS 137
Introduction to technical specifications 138
Interface specifications 139
Performance specifications 142
Mechanical specifications 144
Power requirements 146
Environmental requirements 147
Minimum computer requirements 148
EQUIPMENT HANDLING 149
Transporting Kongsberg Mesotech equipment 150
Lifting units and transportation boxes 151
Inspection of units and transportation boxes after arrival 152
Specifications for storage prior to installation or use 153
Unpacking standard parts and units 154
Repacking the Sonar Head 156

About this manual

The purpose of this manual is to present the descriptions and drawings required to do basic maintenance tasks on the Kongsberg M3 Sonar Multibeam sonar.

Target audience

The manual is intended for technical personnel. You are expected to have basic mechanical skills and familiarity with handling of sensitive electronic equipment.

You must also be familiar with computer hardware, signal processing, interface technology and traditional troubleshooting on electronic and mechanical products.

License information

The M3 Software is included with the M3 Sonar system and updates are available free of charge and can be downloaded from: http://www.kongsberg.com/mesotechsoftware.

Software version

This M3 Sonar Maintenance Manual complies with M3 software version 2.4.

Registered trademarks

Observe the registered trademarks that apply.

Windows® is a registered trademark of Microsoft Corporation in the United States and other countries.

M3 Sonar® is a registered trademark of Kongsberg Mesotech Limited in the United States and other countries.

We want your feedback

We want to improve M3 Sonar continuously. We also want our end-user documentation to be comprehensive and relevant. You can help. Please provide comments, suggestions or constructive criticism to our support office. You can contact us by phone at +1 604 464 8144, or by email at: km.support.vancouver@km.kongsberg.com.

M3 Sonar

Topics

System description, page 9

System diagram, page 10

System units, page 11

General safety rules, page 14

Maintenance philosophy, page 15

Support information, page 16

System description

The Kongsberg Mesotech M3 Sonar is a compact, versatile multibeam sonar.

Multibeam sonars have an array of transducers that simultaneously transmits pings (sound pulses) at a specified frequency to cover a large area in less time than a single-beam transducer. To generate data, computer software assigns a colour range corresponding to the amount of sound reflected off a target. The distance to the target is determined by the length of time it took to receive the transmitted acoustic pulse.

By combining the high refresh rate of a conventional multibeam sonar with an image quality comparable to a single-beam sonar, the M3 Sonar provides high-resolution images that are easy to interpret. The M3 Sonar detects objects out to 150 metres and has a 120° to 140° field of view, allowing you to see the full underwater picture in real-time.

The M3 Sonar provides wide-angle full-range situational awareness and concurrent ultra-short range imaging with dynamic focusing. For optimized obstacle avoidance, the M3 Sonar uses variable vertical beamwidth.

System diagram

The system diagram identifies the main components of a basic M3 Sonar system. Only the main connections between the units are shown. Detailed interface capabilities and power cables are not shown.

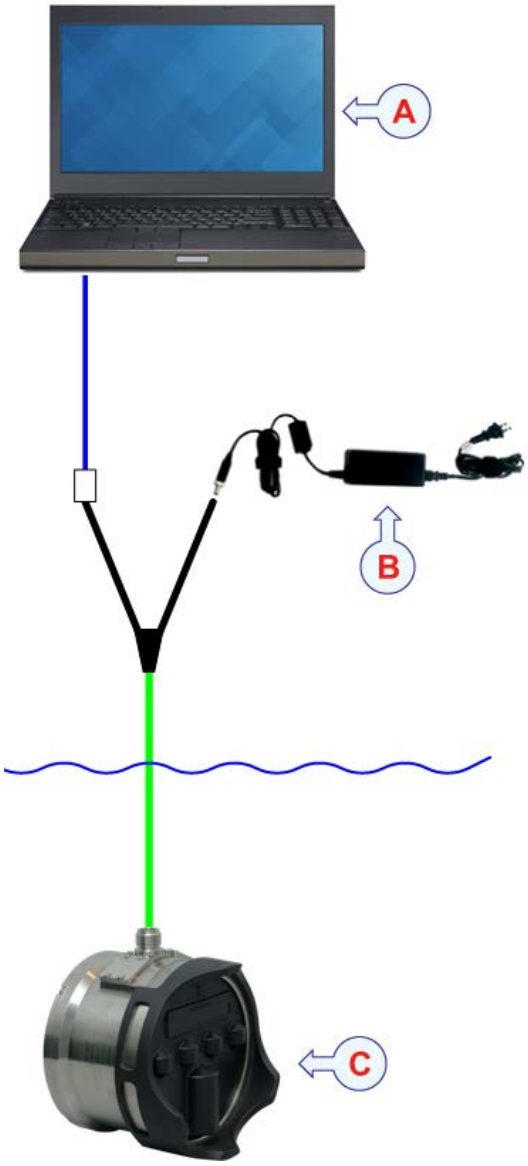

A *Sonar Processor*

B *Power supply*

C *M3 Sonar Head*

System units

Topics

Sonar Processor, page 12

Power supply, page 12

Sonar Head, page 13

Sonar Processor

In this publication, the computer is referred to as the Sonar Processor. The Sonar Processor contains the operational software, and offers the user interface that allows you to control the M3 Sonar. It is a vital part of the M3 Sonar Multibeam sonar.

The Sonar Processor runs the M3 software that manages communication with the Sonar Head, performs all beamforming and image processing and presents the sonar imagery. The Sonar Processor communicates with the sonar through a standard Ethernet cable.

If you purchase a computer locally, make sure that the chosen model meets the functional and technical requirements. The computer must be designed for rugged use, and the construction must be able to withstand the vibrations and movements of a vessel.

Related topics

Minimum computer requirements, page 148

Power supply

The Sonar Head requires a DC power supply to run.

Normally, the DC voltage is supplied in the location where the Sonar Head is mounted, such as on a remotely operated vehicle (ROV). A test cable and power supply is available for order as an accessory. The test power supply uses a 24 VDC switching power supply.

Related topics

Power requirements, page 146

Sonar Head

The Sonar Head transmits and receives an acoustic pulse when deployed underwater.

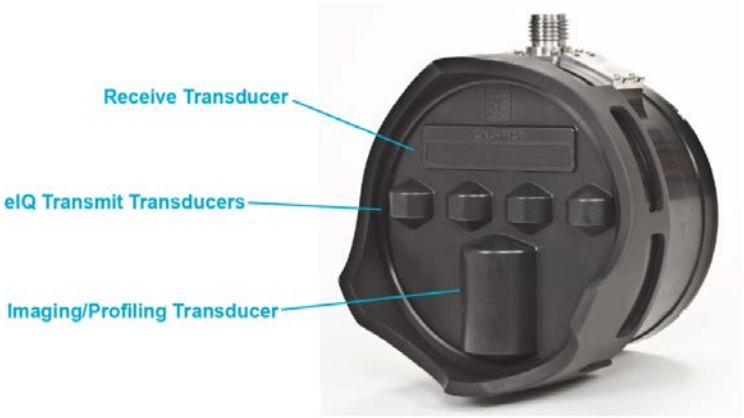

The Sonar Head includes transmit and receive transducers and the electronics to generate the transmit pulse and digitize the received signal. The sonar data is sent to the Sonar Processor using a standard Ethernet link.

Note

The M3 Sonar Head's black polyurethane transducer is delicate. Always keep the Guard Ring and protective cover over the transducer during installation and storage.

Related topics

Performance specifications, page 142
Mechanical specifications, page 144

General safety rules

The following safety precautions must be followed at all times during installation and maintenance work:

WARNING

The voltages used to power this equipment are potentially lethal. You must never work alone on high-voltage equipment!

- You must always switch off all power before installation or maintenance work on the M3 Sonar system.

  Use the main circuit breaker, and label the breaker with a warning sign that informs others that maintenance or installation work is in progress on the system.
- For safety reasons, two persons must always be present during troubleshooting with power ON.
- Read and understand the applicable first aid instructions related to electric shock.
- Whenever maintenance is in progress, it is essential that a first aid kit is available, and that all personnel are familiar with the first aid instructions for electrical shock.

Maintenance philosophy

All maintenance on the M3 Sonar must be carried out according to the maintenance philosophy defined by Kongsberg Mesotech.

Kongsberg Mesotech defines three levels for preventive and corrective maintenance.

1 **Organisational level**

You will only perform limited preventive and corrective maintenance on the M3 Sonar. There is no need for technical education or training, and no need for any instruments. Typical tasks are exterior cleaning, changing fuses and performance tests.

2 **Intermediate level**

You will perform overall preventive and corrective maintenance on the M3 Sonar. We recommended that you are an educated engineer. You should be experienced with computerized and/or mechanical design, computer software and mechanical systems.

It is further expected that you can use standard electronic instruments, such as an oscilloscope and other digital test instruments. You should be trained by Kongsberg Mesotech to maintain the M3 Sonar.

Typical tasks include basic troubleshooting, performance and operational testing, and module replacements.

3 **Depot level**

You will do advanced troubleshooting and maintenance on the M3 Sonar and relevant circuit boards and modules. You must be an educated engineer. You should be experienced with computerized and/or mechanical design, computer software and mechanical systems.

It is further expected that you can use standard electronic instruments, such as an oscilloscope and other digital test instruments. You should be trained by Kongsberg Mesotech to maintain the M3 Sonar.

Typical tasks are performance and operational testing, circuit board and module repair (if and when applicable) and replacement of major items.

The information in this manual has been prepared for the organisational and intermediate maintenance levels.

Note

This manual does not describe the maintenance of the peripheral devices such as printers, displays and commercial computers not provided by us. Navigation sensors and other peripheral devices such as gyro, speed and motion reference sensors are not described. For information about these items, refer to the end-user documentation from the manufacturer.

The technology put to use in the M3 Sonar employs advanced circuit board design. Such items require specialized production and test facilities. These circuit boards and modules - as well as third-party devices - are designed for neither on-board nor depot-level repair. In the event of a failure, the faulty circuit board or module must be replaced, and then returned to Kongsberg Mesotech for repair or replacement.

Support information

If you need technical support for your M3 Sonar you must contact your local dealer, or our support department.

If you require maintenance or repair, contact your local dealer. You can contact us by phone at +1 604 464 8144, or by email at: km.support.vancouver@km.kongsberg.com. If you need information about our other products, visit http://www.km.kongsberg.com/mesotech. On our website you will also find a list of our dealers and distributors.

Troubleshooting

Topics

Tools for troubleshooting, page 18

Failure detection, page 24

Troubleshooting procedures, page 32

Tools for troubleshooting

Efficient M3 Sonar troubleshooting requires a good knowledge of its functionality and design. Specific tools may also be required for certain tasks.

The following tools are relevant for troubleshooting the Kongsberg M3 Sonar Multibeam sonar.

- Test functions in the software
- Analysis of the data presentations made by the M3 Sonar
- Analysis of the log files
- Visual checks
- The Output Messages window
- The Connection Status window
- The Head Status window
- Relevant measurements with applicable test instruments
- Test and verification procedures
- Your own knowledge of how the system works

We assume that you are equipped with a standard set of tools. This tool set must comprise the normal tools for electronic and electromechanical tasks. This includes different screwdriver types, pliers, spanners, a cable stripper, a soldering iron, etc. Each tool must be provided in various sizes. We recommend that all tools are demagnetized to protect your equipment.

Note

If one or more special tools are required for a task, these are specified in the relevant procedure.

It is impossible to create a detailed list of all possible errors and error symptoms in the M3 Sonar.

However, key components that fail will in most cases be detected by the tools you have available.

The most important tool is your own knowledge about the M3 Sonar. Based on a list of the main components in the system, brief descriptions of what they do and how they work, including suggested certain symptoms, you may work out the possible solutions.

Topics

Output Messages window, page 19

Log files, page 20

Connection status window, page 21

Head status window, page 22

Output Messages window

The **Output Messages** window displays information, diagnostic, and error messages.

Description

The **Output Messages** window is located at the bottom of the M3 software presentation by default. You can move the **Output Messages** window by dragging it to a different location.

It is only shown when you have enabled it. To do so, click **Display⟶Output Messages Window**.

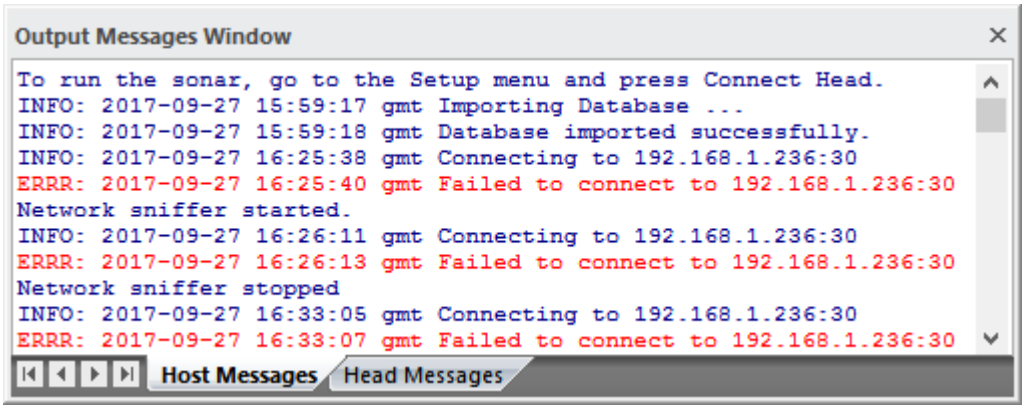

The **Output Messages** window provides you with relevant information about the M3 Sonar operation. The messages are issued by the M3 software in response to your operational actions. As such, it allows you to monitor the system status.

There are two tabs in this window: one for host messages and one for head messages. Host messages are reported by the M3 software. Head messages are reported by the Sonar Head. If there is more than one page of messages, you can use the arrow buttons beside the tab headings to navigate through the pages.

You can scroll through all messages that have been generated since you powered up the system. Warnings and error messages are also listed.

Tip

*All messages issued by the M3 software are saved in a Messages log file (found in the **C:\KML\M3_V0240\LOGS** folder on your hard drive). If you have a problem with the M3 Sonar, the log file may offer useful information to the maintenance technicians.*

Log files

All output messages are stored in a number of log files on the Sonar Processor hard disk. If you experience abnormal behaviour, and wish to consult support, these log files are very useful.

Description

Log files are located in the directory C:\KML\M3_V0240\LOGS. Each filename includes the time and date of the reported events.

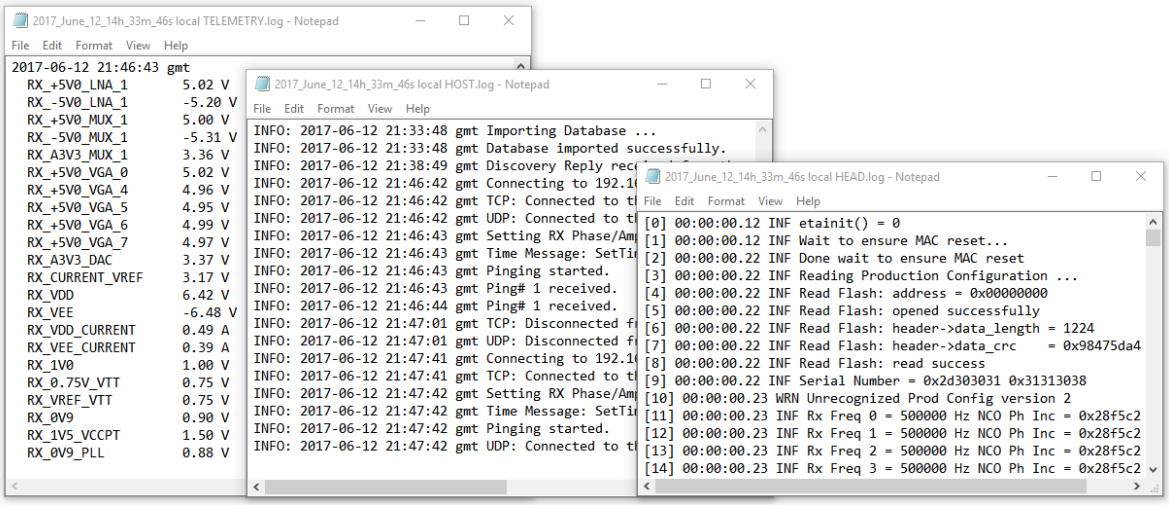

The following log files are available.

- **HOST log file**

  The HOST log file contains messages reported by the M3 software. This file contains the same information displayed in the **Host Messages** tab of the **Output Messages** window.

- **HEAD log file**

  The HEAD log file contains messages reported by the M3 Sonar Head (and up-linked to the M3 software). This file contains the same information displayed in the **Head Messages** tab of the **Output Messages** window.

- **TELEMETRY log file**

  The TELEMETRY log file contains telemetry parameters and values. This file contains the same information displayed in the **Head Status** window (but does not show the current status of each parameter).

- **UDP log file**

  The UDP log file contains network-related diagnostic messages. This file is only available if you enable network logging.

Tip

To enable logging, click ***Setup⟶System Configuration⟶Devices⟶Sonar Setup****, then select any log level from the* **Network log level** *drop-down list.*

Connection status window

The **Connection status** window displays the current status of your Sonar Head, as well as other devices in the system.

How to open

Click the system status text (for example, “Active”, “Inactive”, “Playback”, etc.) on the status bar.

Description

You can view the head name, serial number, IP address, and current connection status of your Sonar Head. You can also see the connection status of any rotators or other sensors you have installed.

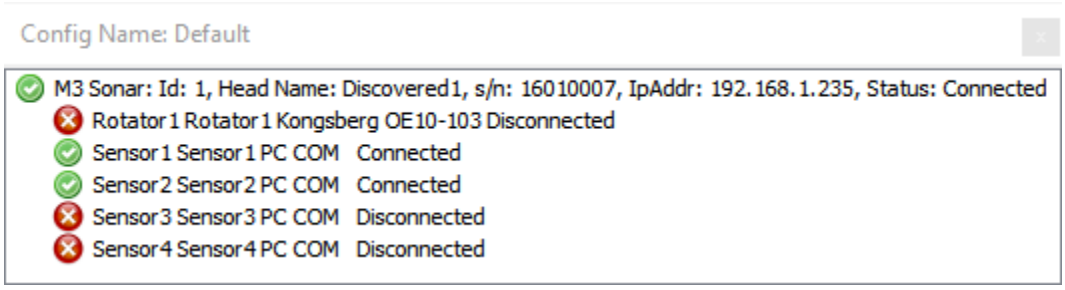

A check mark in a green circle indicates that your device has connected successfully. If any items are shown with an “X” in a red circle, it usually means the device has failed to connect.

Tip

Clicking the M3 Sonar connection status (on the top line) opens the **Head Status** *window.*

Head status window

The **Head status** window displays telemetry information from the Sonar Head.

How to open

In the **Connection Status** window, click the M3 Sonar Head status (on the top line).

Description

Sonar Head currents and voltages are listed for troubleshooting purposes.

Contact customer support if there are any parameters that do not show a check mark in a green circle when the Sonar Head is running.

To avoid false positives, wait at least one minute after running the Sonar Head before checking the **Head Status** window.

Tip

The TELEMETRY log file contains a time-stamped record of the information displayed in this window. Log files are located in the directory C:\KML\M3_V0240\LOGS.

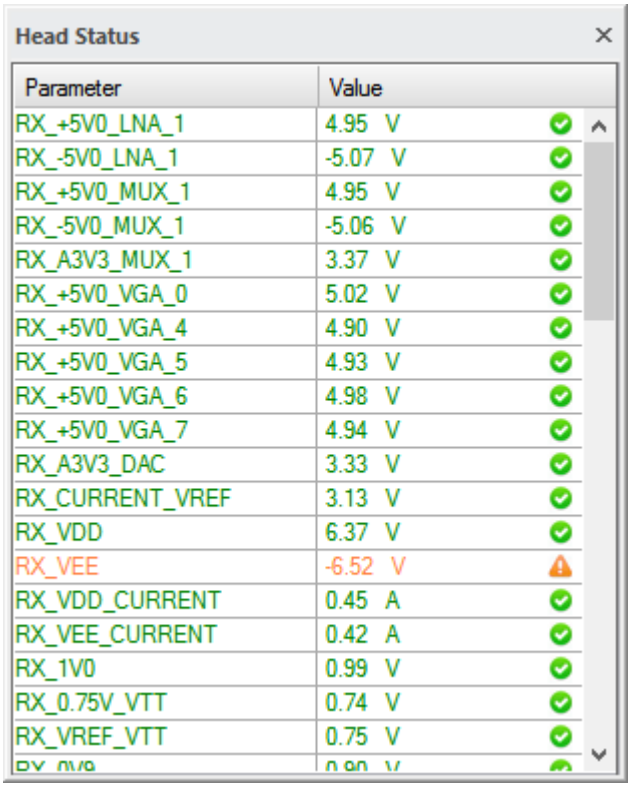

Details

The following icons represent the state of each parameter value.

Parameter values can fall on a continuum ranging from **minimum⟶low⟶normal⟶high⟶maximum**.

Green circle = OK

The parameter value falls within a normal range and is not too low or too high.

Orange triangle = Warning

The parameter value falls within the low and minimum thresholds, or within the high and maximum thresholds.

Red circle = Alarm

The parameter value is less than the minimum or higher than the maximum.

Grey triangle = Unknown

The value could not be determined, or does not exist in the Sonar Head.

Failure detection

Topics

Sonar Head connection failure detection, page 25

General fault finding, page 27

Sonar Head connection failure detection

Refer to this table if you cannot connect to the Sonar Head and cannot ping 192.168.1.234 (the Sonar Head IP Address).

Note

The system status will remain as "Inactive" on the status bar if you are experiencing a connection problem.

Probable cause	**Corrective Action**
The IP Address on the computer is not set correctly.	Confirm the Ethernet adapter has the IP Address set to **192.168.1.233** with Subnet Mask **255.255.255.0**.
The IP Address of the computer that is connected to the M3 Sonar was changed while the M3 software is still running.	Close the M3 software, then open it again.
The IP Address of the Sonar Head was changed without powering down the Sonar Head.	1) Power off the Sonar Head, then power it back on. 2) Wait 20 seconds before clicking **Setup⟶Connect**.
There is no physical connection to the Sonar Head.	Confirm the wiring from your computer to the Sonar Head is correct and that any switches, routers or fiber optic converters are powered on.
The power supplied to the Sonar Head is not within the specified input voltage or current range.	Confirm that the voltage at the Sonar Head connector is between 12 to 36 VDC and capable of supplying up to 60W.
The communication link is of poor quality, or cable(s) are improperly terminated.	Check the Ethernet link between your computer and the Sonar Head. Test the cables with a suitable Ethernet tester, such as the Fluke CableIQ™ Ethernet Cable Qualification Tester (CIQ-100).
You clicked **Setup⟶Connect** too soon after powering on the Sonar Head.	1) Power off the Sonar Head, then power it back on. 2) Wait 20 seconds before clicking **Setup⟶Connect**.
On some computers, the M3 software may incorrectly try to use the wireless adapter or other Ethernet adapters to connect to the Sonar Head.	Disable all other Ethernet adapters, except for the one you are using. Also, disable the wireless adapter. Then, try connecting to the Sonar Head again.
The Ethernet adapter may be damaged or the settings are configured in a way that does not support operation with the Sonar Head.	Use another Ethernet port on your computer (or try another computer).
The Sonar Head and computer are connected to a shared network with an IP Address conflict.	Remove the Sonar Head and computer from the shared network and establish a connection with the two connected directly together. Alternatively, change the IP Address of the Sonar Head, computer, or other device with the IP Address conflict.
The Ethernet cable length is too long.	Use a shorter cable. If using a shorter cable is not feasible, use Ethernet extenders or switches to extend the link distance between the Sonar Head and computer.

Probable cause	Corrective Action
If the IP Address shown in the **Output Messages** window is not on the same network as the computer, then the IP Address configuration used by the M3 software is not correct.	1) Click **Setup⟶System Configuration⟶Devices⟶Sonar Setup**. 2) Click **Discover Sonar Heads**. You should see a Sonar Head that is on the same network as the computer. 3) Click **Use Discovered Head**.
The IP Address of the Sonar Head is different from the address saved on the **Sonar Setup** page.	1) Click **Setup⟶System Configuration⟶Devices⟶Sonar Setup**. 2) Click **Discover Sonar Heads**. You should see a Sonar Head that is on the same network as the computer. 3) Click **Use Discovered Head**.
Your Ethernet adapter / converter may not be compatible. For example, some models are able to connect at 1000 Mbps on all four Ethernet pairs, but not 100 Mbps over two pairs.	If you are installing the M3 Sonar on an ROV, refer to the Focal multiplexer compatibility table in this manual. Alternatively, you can install one 100-Mbps Ethernet switch between the Sonar Head and multiplexer, and a second switch between the control-room multiplexer and Sonar Processor computer.

Related topics

Defining the IP address on the Sonar Processor network adapter, page 46
Changing the Sonar Head IP Address, page 49
Focal multiplexer compatibility table, page 115

General fault finding

The table below lists observable symptoms, their probable cause, and recommendations for corrective action.

When troubleshooting problems with the ping rate or update rate, keep the following definitions in mind.

Ping Rate

The ping rate is the number of transmit/receive cycles per second.

The ping rate is determined by the following.

- Taken from the current sonar application or range (parameter values can be viewed in the M3 Sonar Application database).
- Calculated based on the **Override Network Link Speed** value, if enabled on the **Sonar Setup** page.
- Calculated based on the M3 software's estimated available bandwidth. When the **Override Network Link Speed** box on the **Sonar Setup** page is unchecked, then the M3 software attempts to estimate the available telemetry bandwidth. If the estimated available bandwidth is less than the bandwidth required by the sonar application/range, the M3 software reduces the ping rate to compensate.

Note

If an external sync input triggers the Sonar Head in Slave Mode, the ping rate displayed in the **Information Widget** *may be different from the actual ping rate.*

Update Rate

The update rate is the number of times the sonar view is updated per second.

The update rate is usually the same as the ping rate displayed in the **Information Widget** in the sonar view. However, in some cases they may differ. For example:

- The Sonar Head is set for external sync input and the ping rate is determined by the external trigger.
- The system is impacted by other processes. For example, the computer may not be able to keep up with displaying all the pings.

Symptom	Probable Cause	Corrective Action
The system is able to connect with a 1000Base-T link using all four Ethernet pairs. However, a 100Base-TX connection cannot be made. We assume you are using the following Green and Orange pairs in your wiring of the RJ-45 Ethernet cable to the SEA CON® cable. RJ-45 Pin 1 to SEA CON® Pin 2 (orange/white) RJ-45 Pin 2 to SEA CON® Pin 4 (orange) RJ-45 Pin 3 to SEA CON® Pin 5 (green/white) RJ-45 Pin 6 to SEA CON® Pin 8 (green)	The Ethernet adapter speed setting is set in the Windows adapter properties to 1000 Mbps only.	1) Search for "view network connections" in the Windows search box. 2) Right-click on the **Local Area Connection** connected to the Sonar Head, then select **Properties**. 3) Click **Configure⟶Advanced**, then select *Speed & Duplex* from the **Property** list. 4) Select *Auto Negotiation* from the **Value** list.
The following message appears when connecting to the Sonar Head: "Configuration was updated in the sonar head. Please reset power to the sonar head and reconnect."	This is an automated Sonar Head update to correct an internal configuration error for sonar heads built before May 2013.	1) Power off the Sonar Head, then power it back on. 2) Click **Setup⟶Connect** in the M3 software.
The following message appears when starting up the M3 software: "Failed to load the database."	The desktop M3 software shortcut was not created properly.	Delete the shortcut and create a new one using "C:\KML\M3_V0240\bin\M3.exe" as the location. Alternatively, right-click the shortcut, then select **Properties**. Enter "C:\KML\M3_V0240\bin" into the **Start in** field. Click **OK**.
Errors are shown in the **Head Status** window.	You opened the **Head Status** window too soon after connecting the Sonar Head to the system.	Close the **Head Status** window. Wait at least one minute after connecting the Sonar Head before opening the **Head Status** window again.
There is noise in the sonar view image.	The sonar is picking up noise from the DC-switching power supply used to power the Sonar Head.	Install a filter to the output of the DC-switching supply. A suitable filter can be purchased from Kongsberg Mesotech.

Symptom	Probable Cause	Corrective Action
The Sonar Head connects but fails to update the sonar view. The system status switches between "Active" and "Inactive" on the status bar. The message log shows that the Sonar Head loses connection then reconnects.	The power supply voltage to the Sonar Head is intermittent.	Make sure that the power supply is set for the correct line voltage. For example, the manual switch on the power supply may be set to 220 VAC when the line voltage is 110 VAC. Confirm the cable-loop resistance and supply voltage meet the power requirements.
Profile points are not visible in the **3D Point Cloud** window during operation or playback of M3 Sonar data.	Profiling is not enabled.	1) Click **Display⟶Profiling Settings**. 2) Select either **Image and Profile** or **Profile Only**.
Playback of a recording fails, or the M3 software crashes during playback.	The recordings have become corrupted during a file transfer to another computer.	Make sure that playback works on the same computer that was used to record the data. When you copy the files to a USB flash drive, make sure the drive is safely ejected.
The Kongsberg OE10-103 (single-axis pan unit rotator) does not respond when using a *Goto* command in the **Rotator Test** dialog box.	This is a known issue where the rotator will not move if requested to go to an angle of 180° (+/- 2.0°).	Split up the command into two or more *Goto* commands of less than 180° each.
The **Rotator Control** dialog box does not appear when running the sonar. The **Rotator** menu option is greyed out in the **Display** menu. The **Connect** button in the **Rotator Test** dialog box is also greyed out.	An error occurred when the **Rotator Control** dialog box was docked in a previous session or when used with multiple monitors.	Clear the registry. In the bottom-left corner of your Windows desktop, type "regedit" into the Windows search box, then press **Enter** to open the **Registry Editor** window. Select the folder **Computer⟶HKEY_CURRENT_USER⟶Software⟶MUM⟶M3**. Right-click on the **M3** folder, then select **Delete**.
The update rate does not match the expected value for the sonar application or range you are using.	Problem with the sync trigger circuit design or implementation.	Make sure that the sync control circuit you are supplying is designed to operate within the limits of the M3 Sonar sync design.

Symptom	Probable Cause	Corrective Action
The ping rate changes over time for a fixed sonar application or range. If you have two Sonar Heads, one Sonar Head may ping slower than the other. You can verify the slower ping rate by listening to the transmit pulse when the Sonar Head is out of the water and noting if it matches the ping rate in the sonar view.	There is a marginal telemetry link (or interference with the link). A problematic telemetry link can cause packet loss or reduced Ethernet bandwidth. This marginal telemetry link causes the M3 software to lower the ping rate because it has measured the available network bandwidth and reduced the ping rate accordingly.	Connect a 50-foot test cable between the Sonar Head and Sonar Processor to rule out a problem with your cables, fiber optic to Ethernet media converters, or Sonar Head and Sonar Processor. If the problem still persists, you can perform a work-around by overriding the network link speed. 1) Click **Setup→System Configuration** in the M3 software. 2) Check the **Override Network Link Speed** box and enter 125 into the **Mbps** field to set an override value. If the problem persists or if pings are missing in your recorded data, reduce the override value.
The ping rate does not match the expected value for the sonar application and range you are using, or the update rate is lower than the displayed ping rate.	The Sonar Head is set up for Slave Trigger Mode. In this mode, the sync trigger can be slower than the ping rate because it uses the input trigger pulse repetition rate as the ping rate.	Adjust the sync input trigger rate.
The sonar view does not appear to be updating at the expected update rate.	If you have checked the **Override Network Link Speed** box on the **Sonar Setup** page, then the displayed ping rate will be limited to the override value. Also, the displayed ping rate may be different from the update rate because the system might be impacted by other processes. For example, the computer is not able to keep up with displaying all pings.	1) Click **Setup→System Configuration** in the M3 software. 2) Check the **Override Network Link Speed** box and enter 125 into the **Mbps** field to set an override value. If the problem persists or if pings are missing in your recorded data, reduce the override value. For optimal performance, make sure that your Sonar Processor meets the minimum computer requirements.
Slow ping rate when using a VDSL Sonar Head.	You are using the wrong Rx controller firmware. For applications using a long cable and VDSL telemetry, firmware version 1.5 (or later) is required for faster performance.	Upgrade your firmware to version 1.5 (Part number 320-27701000-0150). You only need to upgrade the .RXF file and the .ASW file. You do not need to downgrade the .TXF file.

Symptom	Probable Cause	Corrective Action
When attempting to synchronize the Sonar Head clock with an external 1PPS source, the NMEA ZDA sentence is split into several lines (shown in the **Output Messages** log file.	The serial server (linked to a GPS) is splitting the ZDA sentence into several UDP packets. In order for 1PPS synchronization to work properly, the M3 software requires that the ZDA sentence is sent in one packet.	Configure your serial server to buffer incoming serial data until a hex 0A (linefeed/delimiter) character is received, then send out the buffered contents as an Ethernet UDP string. The details of this configuration procedure will vary depending on your hardware and manufacturer.
A periodic drop in traffic (every 10 to 20 seconds), resulting in missing pings.	The third octet of your Sonar Head IP Address has been set to a value of 100 or more. There is a known issue with incompatible IP Addresses in this range.	Set the third octet of the Sonar Head IP Address to the default value (1). For example, xxx.xxx.1.xxx.
Packet loss, missing pings, and a lagging UI.	Your Sonar Processor computer does not meet the minimum requirements, especially if you are running more than one M3 Sonar.	Assess your computer's performance using the PassMark benchmarking software. When running one M3 Sonar, an average CPU Mark of 6000 (or better) is recommended. When running two M3 Sonars, an average CPU Mark of 8000 is recommended. In addition, you will need at least 8 GB of RAM.

Note

If the sonar view does not appear to be updating at the expected update rate, the data is likely being recorded, but the display processor is not showing all pings. Check the recorded data file to confirm that the recorded time for each ping is updated at the displayed ping rate. Also check that there are no unexpected gaps or jumps in the timestamp for each ping.

Related topics

Defining the IP address on the Sonar Processor network adapter, page 46
Upgrading the Sonar Head, page 47
Changing the Sonar Head IP Address, page 49
Cable plan, page 113
Starting operation of the Sonar Head, page 33
Power requirements, page 146

Troubleshooting procedures

Topics

Starting operation of the Sonar Head, page 33

Troubleshooting a failure to display targets, page 34

Troubleshooting reduced profiling performance, page 38

Making sure that all M3 Sonar cables are properly connected, page 42

Testing the Sonar Head telemetry, page 43

Defining the IP address on the Sonar Processor network adapter, page 46

Upgrading the Sonar Head, page 47

Changing the Sonar Head IP Address, page 49

Starting operation of the Sonar Head

To start operation of the M3 Sonar sonar, you may need to make sure that the Sonar Head has been discovered.

Context

Your Sonar Processor must be on the same network as the Sonar Head. When you are troubleshooting connection failure issues, start by trying to discover the Sonar Head on the **Sonar Setup** page of the **System Configuration** dialog box. If you cannot discover the Sonar Head, refer to the troubleshooting table.

Procedure

1 Click **Setup⟶Connect** to start the Sonar Head.

2 If you see an error in the **Output Messages** window, make sure that the Sonar Head has been discovered.

   a Click **Setup⟶System Configuration⟶Devices⟶Sonar Setup**.

   b Click **Discover Sonar Heads** to search for the sonar on the network.

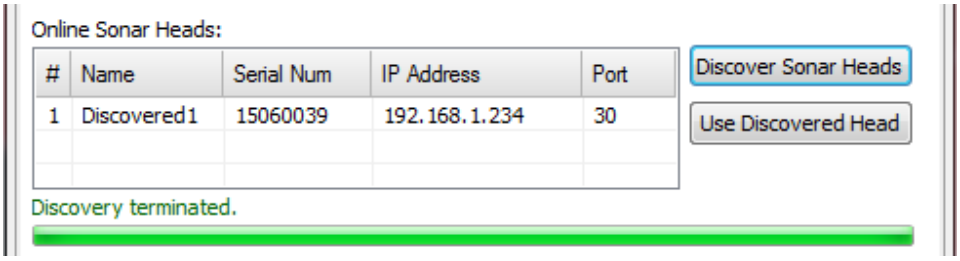

   c If the Sonar Head is found, select it, then click **Use Discovered Head**.

   A discovered Sonar Head appears in the **Online Sonar Heads** list. If the Sonar Head does not appear, the Ethernet connection between the Sonar Processor and Sonar Head has not been established.

   d Click **Close**.

Related topics

Sonar Head connection failure detection, page 25

Troubleshooting a failure to display targets

There are some investigative actions you can take if your Sonar Head is able to connect to the M3 software but fails to display targets in the water.

Prerequisites

- Make sure there is no physical damage on the Sonar Head transducer.
- Your Sonar Processor computer must meet the minimum requirements, especially if you are running more than one M3 Sonar.

Caution

The M3 Sonar Head's black polyurethane transducer is delicate. Always keep the Guard Ring and protective cover over the transducer during installation and storage. Store the Sonar Head in a cool, dry location away from ozone sources (such as electric motors or welders).

Context

The "face" of the Sonar Head houses several transducers. The rounded transducers are transmitters. The flat, rectangular transducer is the receiver.

A *Receive transducer*

B *EIQ Transmit transducers*

C *Imaging/Profiling transducer*

The four EIQ transducers allow an enhanced image quality from a short range with a slower update rate. The Imaging/Profiling transducer allows long-range imaging with a high-speed update rate as well as a narrow profiling beam used to generate a 3D point cloud.

Procedure

1 Adjust the M3 software settings as necessary.

a On the Sonar Processor desktop, double-click the M3 Sonar icon to start the software.

b Make sure that the M3 software has established a telemetry link to the Sonar Head.

Click **Setup⟶System Configuration⟶Devices⟶Sonar Setup**. Click **Discover Sonar Heads** to search for the sonar on the network. If the Sonar Head is found, select it, then click **Use Discovered Head**.

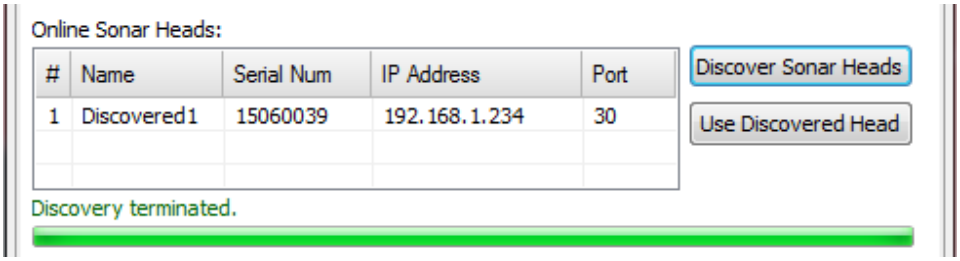

c Click **Setup⟶Connect** to start the Sonar Head.

d Make sure the **Display Gain** is not too low.

Click the **Display Widget** icon. This icon is located in the lower-right corner of the sonar view. To adjust the display gain manually, check the box and drag the **Gain** slider to increase or decrease the gain.

Note

You should be able to see some noise in the sonar view when running the Sonar Head out of the water (in a bench test).

2 Investigate whether the Transmit transducer is emitting a signal.

a Click **Setup⟶Connect** to start the Sonar Head.

b Listen for a ticking sound from the Sonar Head transmitter.

It is difficult to hear the transmit pulse at short ranges. For the best results, you should set the range to 150 m and use *Imaging 30* application mode. A long range will transmit the longest pulse and send the most energy to the transducer.

c Try and feel the vibration of the transmit pulse on the transducer.

Gently rub your hand over the transmitter. Imaging, Profiling and Bathymetry application modes use the large rounded transducer. EIQ modes use the four smaller rounded transducers. For the best results, you should set the range to 150 m and use *Imaging 30* application mode.

d Use an oscilloscope to look for the transmit pulse on the Transmit transducer.

Place an oscilloscope probe onto the large rounded Transmit transducer when the Sonar Head is running (set at 150 m range using *Imaging 30* mode). A small transmit pulse should be detected on the oscilloscope. This signal may be in the order of a few tens or hundreds of mVpp. Triggering and time base will need to be adjusted to detect the transmit pulse.

e Place the Sonar Head into a small bucket or tank and view the sonar returns.

You may also be able to see small ripples on the water surface when the sonar transmits.

Note

If the Sonar Head is facing down, make sure that there is no air trapped under the transducer and held there by the guard ring. Air between the transducer and water will significantly attenuate the signal. If this is the case, turn the Sonar Head to look forward instead of down.

3 Do a Rub Test to see whether the Receive transducer is detecting a signal.

a On the Sonar Processor desktop, double-click the M3 Sonar icon to start the software.

b On the tool bar, click **Sonar Apps**, then select **Customize Apps** to open the dialog box.

c Select *Rub Test* under the **Other Apps** list on the right side of the dialog box.

d Click the **<<Add** button to move *Rub Test* to the **Favourite Apps** list.

e Select **OK** to save the selected settings and close the dialog box.

f Click **Sonar Apps**, then select **Rub Test**.

g Click **Setup⟶Connect** to start the Sonar Head.

h Rub the flat, rectangular Receive transducer with your fingers.

i Observe the sonar view to see a return from rubbing the transducer.

Tip

If you cannot see a return, you may have to firmly press on the transducer; but make sure you do not damage the urethane with fingernails.

4 Make sure there are no errors or warnings in the **Head Status** window.

a Click the system status text (for example, “Active”, “Inactive”, “Playback”, etc.) on the status bar.

Observe that the **Connection Status** window opens.

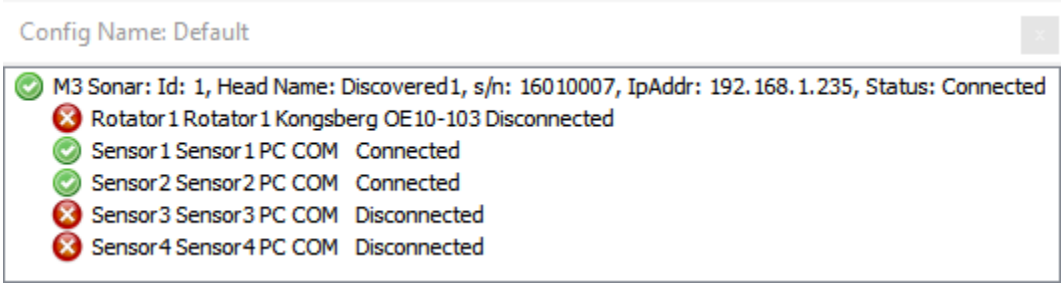

b In the **Connection Status** window, click the M3 Sonar Head status (on the top line).

Observe that the **Head Status** window opens. The **Head status** window displays telemetry information from the Sonar Head.

The following icons represent the state of each parameter value.

- **Green circle = OK**
- **Orange triangle = Warning**
- **Red circle = Alarm**
- **Grey triangle = Unknown**

5 Make sure there are no errors related to the transmitter or receiver in the output message logs.

Log files are located in the directory C:\KML\M3_V0240\LOGS. Each filename includes the time and date of the reported events.

If you need further assistance, send the log files to Kongsberg Mesotech support.

Troubleshooting reduced profiling performance

There are some investigative actions you can take if your Sonar Head is experiencing reduced profile detection performance and cannot detect the bottom consistently.

Prerequisites

- Make sure there is no physical damage on the Sonar Head transducer.
- Your Sonar Processor computer must meet the minimum requirements, especially if you are running more than one M3 Sonar.
- Remove the protective cover from the Sonar Head before sonar operation.

Caution

The M3 Sonar Head's black polyurethane transducer is delicate. Always keep the Guard Ring and protective cover over the transducer during installation and storage. Store the Sonar Head in a cool, dry location away from ozone sources (such as electric motors or welders).

Procedure

1 Make sure that the Guard Ring on the M3 Sonar Head is oriented correctly so that the Kongsberg logo is in the centre, above the middle connector.

Note

Improper alignment of the guard ring may reduce sonar beam coverage and decrease bottom coverage. If the Guard Ring is reversed, two of the guards will block the receiver and reduce the field of view.

2 Make sure that the sonar beam is not blocked or partially blocked.

Mounting the Sonar Head in the correct location and orientation is vital to ensure optimal performance of the system. You must mount the Sonar Head so that it has a clear view within its coverage sector. In other words, there should be no obstructions within a minimum ± 25° vertical and ± 80° horizontal with respect to the sonar transducer face.

Tip

If you are unsure whether your mounting configuration is causing a problem, send photos of the installation to Kongsberg Mesotech support.

3 Double click the M3 icon on the desktop to run the M3 software.

4 Make sure the profiling settings are set up for a bathymetry application.

a If the profiling settings are not visible, click **Display→Profiling Settings** to open the **Profiling Settings** dialog box.

b Select **Image and Profile** in the **Profiling Settings** dialog box.

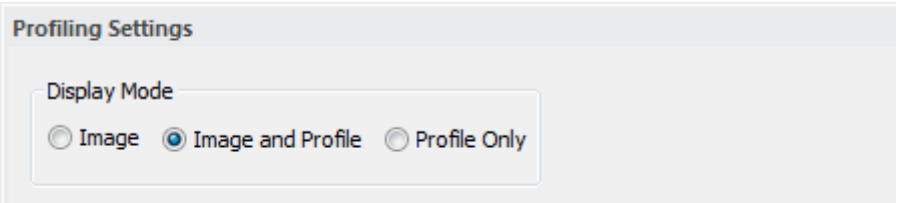

c Set the **Algorithm** to *Split Beam*.

d Set the **Point Selection** to *Strongest*.

e Check the **Depth Tracking** box to automatically adjust the range according to the current depth.

5 Select a Profiling mode suitable for your deployment and water depth. Profiling mode allows you to view a real-time 3D point cloud of the sea bottom or structures under the water.

Click **Sonar Apps** and select an appropriate sonar application from the list.

Profiling: Use this sonar application for the automated point extraction of the sea bottom or structures to create a real-time 3D Point Cloud. The *Profiling* application has a slow ping repetition rate and is best suited for slow-moving ROVs, trenchers, and ploughs.

Profiling - Bathy: This sonar application is ideal for Bathymetry Surveys.

Profiling - Fast: This sonar application performs using much higher ping rates than the normal *Profiling* application. This application is ideal for surface-vessel surveys.

Tip

Use Profiling - Fast or Profiling - Bathy for depths less than eight metres.

6 Make sure the TVG settings are set to default.

a Select the sonar application you wish to configure from the **Sonar applications list** on the top bar.

Note

Each sonar application has its own TVG profile.

b Click the **TVG** button.

This button is located on the tool bar.

c Click the **Default** button.

d Click **Apply** to save the settings.

7 Set the range scale to two or more times the bottom depth.

Note

Running the system with a range scale less than two times the water depth will provide reduced swath widths and may extract profile points close to the surface for the outer beams.

a Right-click inside the sonar view to display the range menu.

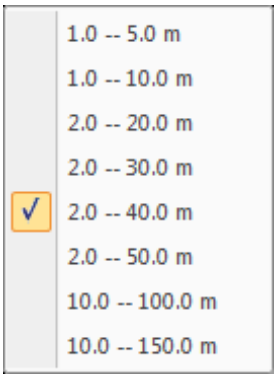

b Select the desired near and far range from the menu.

8 Make sure there is no acoustic or electrical interference in the sonar view.

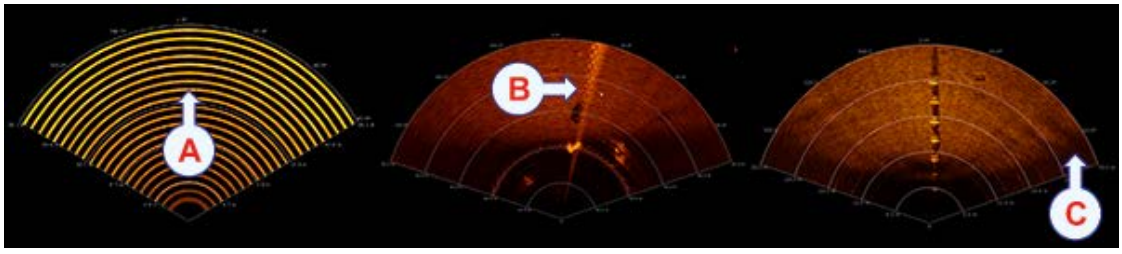

A Make sure that no concentric rings appear. These rings could be caused by other acoustic devices or power-line noise. Rings with black gaps between them could also be due to excess Ethernet traffic when using a shared network.

B Make sure that there isn't a bright radial line originating from the Sonar Head. This line could be caused by thruster noise. If the radial line appears with the Sonar Head out of water, it could indicate noise in the power line or a fault in the Sonar Head.

C Make sure that the bottom appears across the entire width of the sonar view. If the edges appear weak, and profile points are not detected at the edges, make sure there are no obstructions preventing the Sonar Head's receive. (i.e. improperly installed guard ring or proximity to the vessel hull/keel).

Making sure that all M3 Sonar cables are properly connected

The M3 Sonar relies on communication between each system unit, and between the M3 Sonar and external devices. It is very important that all cables are correctly installed, that the proper cable types have been used, and that all cables are connected correctly.

Prerequisites

- All M3 Sonar hardware units have been installed according to the relevant instructions.
- All system cables have been installed.
- All connections have been made.
- All operating power is available.
- Two people with two-way communication devices are required to check the cable cores (if applicable).
- You will need an ohmmeter to verify electrical connections and for continuity testing.
- To check the cable cores, you will need a suitable shorting strap.

Procedure

1 For each cable that is in used on the M3 Sonar:

   a Verify that the cable has been installed according to the cable plan.

   b Verify that the connections made at each end of the cable are correct.

   c Verify that any locally-fitted plugs and connectors are suitable for the installation location.

   For example, sealed or spark-proof connectors should be used in areas where flammable gasses may accumulate.

   d Check that the cables are secured and do not represent a trip hazard.

   e Ensure that all cables are correctly laid in conduits, or are otherwise protected according to the regulations and recommendations laid down by the vessel's registering authority.

   f Ensure that all connections are tight and secure and that any protective covers are fastened correctly.

2 If applicable, verify that each cable core has the correct connection and continuity.

   Note

   Two people are required for this procedure. You use the ohmmeter, and the other person uses the shorting strap.

   a Position one person at each end of the cable.

b Establish good communications via two-way communication devices.

c Ensure that the cable is not connected to any power source.

If a cable terminates in a plug at the unit, disconnect the plug to conduct the test more easily.

d Select one pair of cable cores and verify that the cores are connected to the correct terminals in the unit.

e Connect your ohmmeter to the two terminals and check the continuity.

A low resistance between the two cores may indicate a connection to circuits or units with low internal resistance. Disconnect the cores from the terminal block and test again. The resistance should be nearing open circuit.

f Tell the other person to short the two cores together using the shorting strap.

g Using your ohmmeter, check the continuity again.

The resistance should now be zero ohms.

h Tell the other person to remove the shorting strap.

Verify that the resistance reaches open circuit again.

i Check each core's resistance to ground, and each core's resistance to all the other cores in the cable.

All results should be close to open circuit.

j Reconnect the cores to the terminal block (if they were removed).

k Move on to the next pair of cores and repeat the continuity test until the entire cable has been checked.

Related topics

Inspecting and cleaning the SEA CON® cable connectors, page 62

Testing the Sonar Head telemetry

You can run a telemetry test to make sure the link between the Sonar Head and the M3 software is working correctly.

Prerequisites

- For this test you will need the Sonar Head connected to the Sonar Processor and powered on.
- The M3 software must be running.

- This procedure is made for the Microsoft® 64-bit Windows 10 operating system. It is assumed that you are familiar with the Windows® operating systems, computer technology, and interface principles.

Context

This procedure explains how to measure the available bandwidth on a 100Base-TX (100 Mbps) Ethernet link. The same procedure can be used for 10BaseT and 1000BaseT links by selecting the appropriate sonar application and adjusting the Ethernet adapter settings to the corresponding link speed.

Note

There are no standard sonar applications with a telemetry-link speed requirement higher than 100 Mbps.

The ping rate is normally taken from the sonar application or range setting. If the estimated available bandwidth is less than the bandwidth required by the sonar application/range, the M3 software reduces the ping rate to compensate.

Note

The update rate is the number of times the sonar view is updated per second. The displayed ping rate may be different from the update rate because the system might be impacted by other processes.

The **Override Network Link Speed** function allows you to use the telemetry bandwidth value (in Mbps) entered into the box instead of the default speed. If the applied override telemetry bandwidth is less than the telemetry bandwidth required by the sonar application/range, the ping rate is reduced.

Procedure

1 Add the Ethernet Test application to your list of favourite applications.
   a Open the **Sonar Apps** menu on the top bar, then select **Customize Apps**.
   b Double click on *Ethernet Test - 100Mbps* shown under **Other Apps**.
   c Click **OK**.
2 Open the **Sonar Apps** menu on the top bar, then select **Ethernet Test - 100Mbps**.
3 Click **Setup⟶Connect** to start the Sonar Head.
4 Open the **Task Manager** and find your Local Area Connection.
   a Press the **<CTRL> + <ALT> + <DEL>** keys.
   b Click **Task Manager**.

c Click on the **Performance** tab.

d Click on the Ethernet connection for the Sonar Head.

5 Make sure the activity on your local network is as expected.

a Allow the system to run for a few minutes to plot the *Throughput* graph.

b Observe the graph to determine the average network link speed.

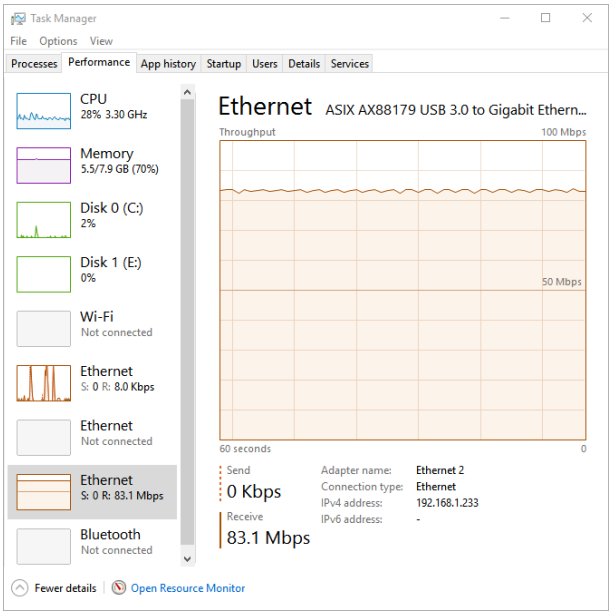

An average link speed of at least 80 Mbps is required by most sonar applications (some applications and range scales will use less). A link speed of less than 80 Mbps may result in a slower than expected ping rate.

c Right-click in the *Throughput* graph and select **View network details**.

Observe that the **Network Details** window opens.

d Confirm that the *Network utilization* is at least 80%.

Note

If the Network utilization is less than 80%, disconnect the sonar, close all other programs, then reconnect the sonar. In general, make sure that your network environment supports the required link speed.

e In the M3 software, look for any messages in the **Output Messages** window.

Make sure there are no lost packets.

Tip

The contents of the **Output Messages** *window are also saved to a file in the folder C:\KML\M3_V0240\LOGS.*

f If you see missing pings, try reduce the value in the **Override Network Link Speed** box to improve the performance.

Defining the IP address on the Sonar Processor network adapter

The communication between the Sonar Processor and the Sonar Head is made using a high-speed Ethernet cable. If a Sonar Processor is not configured to connect to the sonar, you must define which IP Address and Subnet mask the Ethernet adapter in the Sonar Processor shall use for this communication.

Prerequisites

This procedure is made for the Microsoft® 64-bit Windows 10 operating system. It is assumed that you are familiar with the Windows® operating systems, computer technology, and interface principles.

Context

As long as you do not change the Sonar Processor to another computer, or replace the network adapter in your Sonar Processor, you will only need to do this once.

Procedure

1 On the Sonar Processor, close the M3 software.

2 Open the **Network Connections** dialog box.

a In the bottom-left corner of your desktop, select the Windows® **Start** button.

b On the menu, select **Settings**.

c Observe that the **Windows Settings** dialog box opens.

d Select **Network & Internet**.

e Select **Change adapter options**.

f Select the network adapter you are going to use; then right-click and select **Properties** on the short-cut menu.

g On the list of connections, select **Internet Protocol 4 (TCP/IPv4)**, and then **Properties**.

3 Select **Use the following IP address**, and type the IP address and network mask.

IP Address: **192.168.001.N** (*"N" can be any number from 1 to 254, except 234, which is the Sonar Head default.*)

Subnet mask: **255.255.255.0**

You can leave **Default Gateway** blank.

4 Select **OK** to save the settings, then close all the dialog boxes.

Related topics

Sonar Head connection failure detection, page 25

Upgrading the Sonar Head

The Sonar Head has both software and firmware. You can upgrade these with the latest versions obtained from Kongsberg Mesotech. You can also use this same procedure to downgrade software and firmware versions.

Prerequisites

If you are performing a full upgrade, you will need to write three files to the Sonar Head before power cycling the unit:

- The Sonar Head software file (.ASW)
- The Sonar Head transmit firmware file (.TXF)
- The Sonar Head receive firmware file (.RXF)

You can download these files from our website.

- https://www.km.kongsberg.com/mesotechsoftware

Context

The **Head Firmware Configuration** dialog box allows you to upgrade the Sonar Head firmware. This dialog box is only available when the Sonar Head is connected and paused.

Procedure

1 Click **Setup⟶Connect** to start the Sonar Head.

2 Open the **Head Firmware Configuration** dialog box.

a Click the circular icon in the top-right corner of the sonar view to open the **Menu Widget**.

b Click **Pause**.

c Click **Setup⟶Head Firmware Configuration**.

Observe that the **Head Firmware Configuration** dialog box opens.

3 Take note of the current versions of software and firmware (Rx HW, Rx SW, Tx HW, and Tx SW).

The version numbers are listed in the **Head Firmware Configuration** dialog box.

4 Write the latest firmware and software to the Sonar Head.

a Select *Head Application Software* under **Configuration type**.

b Click the file folder icon under **Configuration file** to browse and select the .ASW file on your local drive.

Tip

Use the .ASW file with the same version as the .RXF file.

c Click **Write**.

Observe that a confirmation dialog box opens.

d Click **Yes** to start the upgrade.

Tip

If you click **Cancel** *or* **Stop***, the upgrade process will be aborted. The Sonar Head software and firmware will not be changed.*

e Select *RX FPGA Configuration* (receive firmware) under **Configuration type**.

f Click the file folder icon under **Configuration file** to browse and select the .RXF file on your local drive.

g Click **Write**, then click **Yes** to start the upgrade.

Note

This file may take a few minutes to program.

h Select *TX FPGA Configuration* (transmit firmware) under **Configuration type**.

i Click the file folder icon under **Configuration file** to browse and select the .TXF file on your local drive.

j Click **Write**, then click **Yes** to start the upgrade.

Note

This file may take a few minutes to program.

k Close the **Head Firmware Configuration** dialog box.

5 Confirm the upgrade was successful.

a Click **Setup→Disconnect**.

b Disconnect the power to the Sonar Head, then power it up again.

c Wait ten seconds for the software to discover the Sonar Head.

d Click **Setup→Connect** to start the Sonar Head.

e Click **Setup→Head Firmware Configuration**.

Observe that the **Head Firmware Configuration** dialog box opens.

f Confirm that the software and firmware has been upgraded from the versions you took note of earlier.

Note

The receive hardware (RX HW) and software (RX SW) must both be on the same version. In other words, the application software (.ASW) and FPGA RX Firmware (.RXF) files being upgraded must have the same version numbers. The Sonar Head will make sure the versions are the same. If not, the version numbers shown in the **Head Firmware Configuration** *dialog box will not be updated.*

Changing the Sonar Head IP Address

If you have a unique network environment (such as an IP Address conflict between two devices on your network), or you are installing a second Sonar Head, then you will need to change the IP Address of the Sonar Head.

Context

The **Head Network Setup** dialog box allows you to change the Sonar Head network parameters, such as the IP address. This dialog box is only available when the Sonar Head is connected and paused.

You can program the IP address and the IP port of the Sonar Head for various network environments. The factory default IP address is 192.168.1.234, and the default port number is 30.

Procedure

1 Set up the Sonar Head and M3 software.

a Connect the Sonar Head directly to the computer network card. Do not connect through an intermediary device, such as a network switch or router.

b Power up the Sonar Head.

c Double click the M3 icon on the desktop to run the M3 software.

d Click **Setup⟶Connect** to start the Sonar Head.

e Click the circular icon in the top-right corner of the sonar view to open the **Menu Widget**.

f Click **Pause**.

2 Write the new IP Address to the Sonar Head.

a Click **Setup⟶Head Network Setup**.

Observe that the **Head Network Setup** dialog box opens.

b Click **Read from Head** to refresh the fields in the **Head Network Setup** table.

c Enter the new IP Address in the table.

Tip

Avoid setting the third octet of the IP Address to a value of 100 or more, as you may experience periodic drops in traffic. We recommend leaving the third octet set to the default value (1). For example, xxx.xxx.1.xxx.

d Click **Write to Head**.

Observe that a confirmation dialog box opens.

e Click **Yes** to confirm.

Wait for the write operation to complete.

f Close the **Head Network Setup** dialog box.

3 Click **Setup⟶Disconnect**.

4 Apply the new IP Address to the Sonar Head.

a Power off the Sonar Head for three seconds, then power it back up.

b If necessary, change the computer's network adapter address to place it on the same network as the Sonar Head.

c Click **Setup⟶System Configuration⟶Devices⟶Sonar Setup**.

d Click the **Discover Sonar Heads** button.

The Sonar Head with its updated IP Address should appear in the **Online Sonar Heads** table.

e Select the Sonar Head in the **Online Sonar Heads** table, then click the **Use Discovered Head** button.

f Close the **System Configuration** dialog box.

5 Click **Setup⟶Connect** to start the Sonar Head.

Related topics

Sonar Head connection failure detection, page 25

Preventive maintenance

Topics

Preventive maintenance schedule, page 53

Personnel for preventive maintenance tasks, page 56

Inspecting and cleaning the display, page 56

Inspecting and cleaning the Sonar Processor, page 57

Inspecting and cleaning the Sonar Head, page 58

Installing the Guard Ring and protective cover, page 59

Inspecting and cleaning the SEA CON® cable connectors, page 62

Inspecting and cleaning the SubConn® cable connectors, page 64

Cleaning marine growth off the Sonar Head, page 66

Painting the Sonar Head, page 68

Inspecting and replacing the sacrificial anodes, page 70

Approved anti-fouling paints, page 73

Preventive maintenance schedule

In order to secure long and trouble-free operation of the M3 Sonar, certain specific preventive maintenance tasks must be done. The tasks are organized in a preventive maintenance schedule.

The M3 Sonar is a state of the art Multibeam sonar.

The M3 Sonar hardly provides any user serviceable parts.

In order to secure the M3 Sonar for long and trouble-free use, observe the following preventive maintenance tasks.

Actions to be taken before every survey

1 Perform a close visual inspection of the Sonar Processor. Verify that the Sonar Processor is secured against the physical vibration, movements, and forces normally experienced on a vessel.

2 Perform a close visual inspection of the Sonar Head. Verify that all fasteners on your brackets and mounting equipment have been tightened properly. Make sure that the Guard Ring on the M3 Sonar Head is oriented correctly so that the Kongsberg logo is in the centre, above the middle connector.

3 Remove the protective cover from the Sonar Head before sonar operation.

4 Inspect the physical condition of the sacrificial anode. If the anode is more than two thirds consumed, the anode must be replaced.

Actions to be taken after every use

1 Rinse the Sonar Head thoroughly with a large amount of fresh water each time the Sonar Head is removed from seawater.

Important

Any foreign objects, marine growth, air bubbles, or oily film on the transducer can greatly reduce the sensitivity and performance of the system.

2 Perform a close visual inspection of the Sonar Head. Inspect the transducer for damage. If you are using a dummy plug in the Sonar Head port, make sure the retaining ring is not damaged or missing.

3 Inspect the physical condition of the sacrificial anode. If the anode is more than two thirds consumed, the anode must be replaced. If the anode still has a “new metal shine”, then it isn’t working.

Note

For long-term deployments of the M3 Sonar (where the Sonar Head is permanently submerged), you will need to assess the rate of galvanic corrosion on a regular basis. In this case, inspect the anode at one-week intervals.

4 All cables must be disconnected and protective dust caps placed on all connectors.

5 Place the protective cover onto the Sonar Head. Protecting the transducer face with the cover is especially important if you are exposing the Sonar Head to sunlight.

6 A Sonar Head with an integrated AML sound speed sensor is available from Kongsberg Mesotech. If you are using a Sonar Head with an integrated sound speed sensor, periodic maintenance will prolong the life of the sensor. Clean and rinse the sensor using fresh water. If the sensor is very dirty or oily use warm soapy water and allow the sensor to soak before cleaning with a rag or soft brush.

7 Make sure that the Sonar Head, cables, and accessories are dry before storing in the equipment case.

Actions to be taken every three months

Note

Regular maintenance checkups are especially important for long-term deployments of the M3 Sonar.

1 Inspect and clean the display.

2 Inspect and clean the Sonar Processor.

3 Inspect and clean the Sonar Head.

4 Inspect the physical condition of the sacrificial anode.

5 Clean the transducer face for marine growth.

   Note

   You may determine an interval for cleaning marine growth based on your local conditions. Cleaning can begin at three-month intervals, but can be done more or less frequently depending on the rate of marine growth accumulation.

Actions to be taken every year

1 If required, apply a new layer of anti-fouling paint. Repainting is required once the primer can be seen under the anti-fouling paint, or once marine growth is visible. The frequency of re-application of the anti-fouling paint depends on the type of paint used and the recommendations of the paint manufacturer. Some manufacturers state that re-application of paint may not be required for up to two years.

   Caution

   Never paint the anodes.

2 Check how old the Sonar Processor is. Replace the computer with a new model every three to five years (depending on the brand, model, and how the computer is normally handled).

3 A Sonar Head with an integrated AML sound speed sensor is available from Kongsberg Mesotech. If you are using a Sonar Head with an integrated sound speed sensor, periodic maintenance will prolong the life of the sensor. Send the sound speed sensor to a service centre yearly for diagnostics and recalibration.

Related topics

Inspecting and cleaning the Sonar Head, page 58
Painting the Sonar Head, page 68

Personnel for preventive maintenance tasks

By default, all preventive maintenance tasks are regarded as *organizational maintenance*. As such, all tasks can be done by the end user.

There is no need for neither technical education nor specific M3 Sonar maintenance training.

Unless specified in a specific procedure, there is no need for special tools or equipment.

Inspecting and cleaning the display

To ensure long and trouble-free operation of the display, it must be inspected and cleaned at regular intervals.

Prerequisites

No special tools are required for this task. You will however need a commercially available mild detergent and a lint free cloth. You also need a suitable cleaning fluid for the display screen.

Context

For detailed maintenance instructions, observe the information provided in the display documentation.

Procedure

1 Turn off the unit.

2 Make sure that the unit is kept clean and dry.

3 Make sure that the unit is not exposed to excessive dust and vibrations.

4 Check for physical damage to the cabinet and/or cables.

5 Remove dust and salt water residue with a soft cloth moistened in fresh water. Use a mild detergent.

Note

Do not use strong solvents. The display screen must be handled with care to avoid damage to the anti-glare filter coating.

Inspecting and cleaning the Sonar Processor

To ensure long and trouble-free operation of the Sonar Processor, it must be inspected and cleaned at regular intervals.

Prerequisites

No special tools are required for this task. You will however need a commercially available mild detergent and a lint free cloth.

If you have excessive dust build-up, then you will need some compressed air.

Procedure

1 Wipe the display with a slightly moist micro-fibre cloth.

Ensure the display is off when the LCD is being cleaned.

Caution

Do not use solvents on the display or any other part of the plastic laptop computer - solvents will cause permanent damage to the finish.

2 Defragment the disk drive weekly using the Windows disk defragmentation application.

3 Back up sonar data to an external drive monthly and after each software upgrade or configuration change.

Alternatively, create a disk image using Norton Ghost, Acronis True Image, or other similar recovery tool.

Tip

Re-image the computer with a base install of the operating system (with Windows updates) and the M3 software before each trip to sea.

4 Remove and clean the air filters in the computer.

Inspect the fans for excessive dust build-up and use compressed air to blow the dust out of the computer.

5 Replace the computer with a new model every three to five years (depending on the brand, model, and how the computer is normally handled).

Inspecting and cleaning the Sonar Head

General preventative maintenance measures will help eliminate system downtime due to component failure.

Prerequisites

- A fresh water source
- A commercially available liquid detergent
- Compressed air
- Sacrificial anodes are included with mounting bracket kits, can be purchased from Kongsberg Mesotech, or can be sourced separately.

Note

The M3 Sonar Head's black polyurethane transducer is delicate. Always keep the Guard Ring and protective cover over the transducer during installation and storage.

Procedure

1 Rinse the Sonar Head thoroughly with a large amount of fresh water each time the Sonar Head is removed from seawater.

2 Make sure that the Sonar Head, cables, and accessories are dry before storing in the equipment case.

3 Inspect and clean the transducer both before and after use, if necessary.

Important

Any foreign objects, marine growth, air bubbles, or oily film on the transducer can greatly reduce the sensitivity and performance of the system.

a Inspect the transducer for damage.

b Wash the transducer with a liquid detergent, such as dishwashing soap.

4 Inspect the sacrificial anode.

Replace the anode if it is severely eroded (more than two thirds depleted).

5 When they are not mated, always put a plastic cap over the cable connector and over the underwater connectors on the Sonar Head.

Before installing the cap, make sure the connectors are dry by spraying them with compressed air. Compressed air will remove any water that may be trapped in the connector.

6 Inspect the deployment cable connected to the Sonar Head for cuts or other damage.

   a Before mating, inspect the o-ring(s) in the underwater connector and make sure the o-ring(s) are not missing or dirty.

   b If you are using a dummy plug in the Sonar Head port, make sure the retaining ring is not damaged or missing.

Related topics

Replacing the o-ring in the sonar cable connector, page 76
Replacing the retaining ring in a dummy plug, page 81
Installing the Guard Ring and protective cover, page 59
Cleaning marine growth off the Sonar Head, page 66
Inspecting and replacing the sacrificial anodes, page 70
Preventive maintenance schedule, page 53

Installing the Guard Ring and protective cover

The Guard Ring prevents damage to the transducer during normal use. The protective cover prevents damage to the transducer when installing or storing your M3 Sonar system.

Context

The Guard Ring must remain on the Sonar Head at all times. However, the protective cover must be removed during operation of the M3sonar.

Caution

The M3 Sonar Head's black polyurethane transducer is delicate. Always keep the Guard Ring and protective cover over the transducer during installation and storage.

Procedure

1 Prepare the Guard Ring and Sonar Head for installation.

2 Place the Guard Ring on top of the Sonar Head, angled as shown.

Tip

Ensure the Kongsberg logo is in the center, above the middle connector.

3 Push the Guard Ring downwards, positioning the sides below the Housing's Compression Ring, and clip in place.

Note

Improper alignment of the guard ring may reduce sonar beam coverage and decrease bottom coverage.

4 Place the protective cover over the Sonar Head and Guard Ring and push down until secure.

Result

The Guard Ring and protective cover are installed onto the Sonar Head.

Related topics

Inspecting and cleaning the Sonar Head, page 58

Inspecting and cleaning the SEA CON® cable connectors

General preventative maintenance measures will help eliminate system downtime due to component failure. Only qualified technicians must perform the maintenance.

Prerequisites

- High-quality o-ring extraction tool (available from o-ring distributors)
- Distilled or deionized water
- A low-pressure (15-25 psi) gas stream of dry nitrogen or filtered compressed air (dry nitrogen is preferred)
- Silicone grease or spray
- Either a high-quality o-ring installation tool, or two orange sticks (depending on the connector model). An orange stick is a nonconducting, soft, pliable orangewood soldering production aid, approximately 3/16 inches in diameter and 7 inches long (available from soldering supply distributors).

Context

Cables that are subjected to vibration and exposed to seawater drag should be adequately clamped to prevent fatigue and possible failure. Avoid sharp bends in cables.

If connectors are periodically unmated, SEA CON® recommends a new o-ring be installed.

Note

When they are not mated, always put a plastic cap over the cable connector and over the underwater connectors on the Sonar Head. Plastic splash-proof plugs protect the connections from water ingress, damage to pins or sockets, and contamination of dirt or dust. They are not designed for submergence.

Procedure

1 Before unmating, ensure connectors are free of foreign contaminates.

2 After unmating, visually check for any damage, cut o-rings, or abnormalities.

3 Remove the o-ring (!) using your o-ring extraction tool.

Caution

Avoid damaging o-ring sealing surfaces.

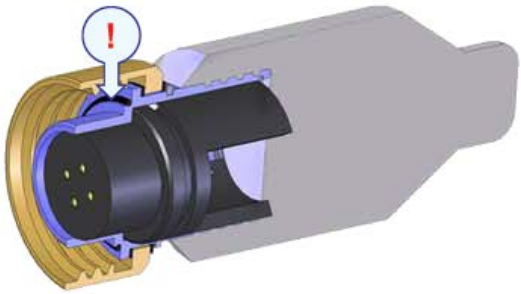

4 Clean any grease, moisture, or foreign particles from the o-ring sealing area, o-ring groove, and inside connector.

Note

Do not use fluid cleaners as they may wick down onto the o-ring around the connector insert and inhibit its proper function.

5 If the internal contact surfaces are dirty or have been exposed to seawater, the receptacle must be flushed with distilled or deionized water and thoroughly dried.

Dry the receptacle using dry nitrogen or compressed air to remove any small foreign particles.

6 Electrically test the connector in accordance with the parameters of the system.

7 Install a new o-ring.

a Inspect the replacement o-ring for any damage or abnormalities.

b Lubricate the o-ring with an appropriate silicone grease or spray.

c Install the o-ring using either two orange sticks or an o-ring installation tool (depending on the connector model).

d Apply a very thin film of an appropriate silicon grease or spray to the o-ring sealing surface.

e Cover or protect the cable plug from foreign contaminates until ready to mate.

8 Inspect the cable connector plug for deterioration of the retaining ring.

The retaining ring is a small steel part that can break over a prolonged period through corrosion.

Related topics

Replacing the o-ring in the sonar cable connector, page 76
Replacing the retaining ring in a dummy plug, page 81
Making sure that all M3 Sonar cables are properly connected, page 42

Inspecting and cleaning the SubConn® cable connectors

General preventative maintenance measures will help eliminate system downtime due to component failure. Only qualified technicians must perform the maintenance.

Prerequisites

- Molykote 44 Medium Grease

  Do not use WD-40, oil compounds, or similar products.
- Spray-based contact cleaner (isopropyl alcohol or liquid soap and hot water)

  Do not use acetone, gasoline, or similar products.

Context

SubConn® cable connectors can be mated above water (dry mate) or underwater (wet mate).

Caution

Always apply grease before mating.

Observe these cable handling rules:

- Disconnect by pulling straight — not at an angle.
- Do not pull on the cable.
- Avoid sharp bends in cables.
- Connectors should not be exposed to extended periods of heat or direct sunlight. If a connector becomes very dry, it should be soaked in fresh water before use.

Procedure

1 Remove any accumulated sand or mud.

2 Clean the connector using a spray-based cleaner.

3 Grease the connectors with Molykote 44 Medium.

  a Apply a layer of grease corresponding to a minimum 1/10 of socket depth (A) to the female connector.

    If mating underwater, more grease is required — about 1/3 of socket depth (B).

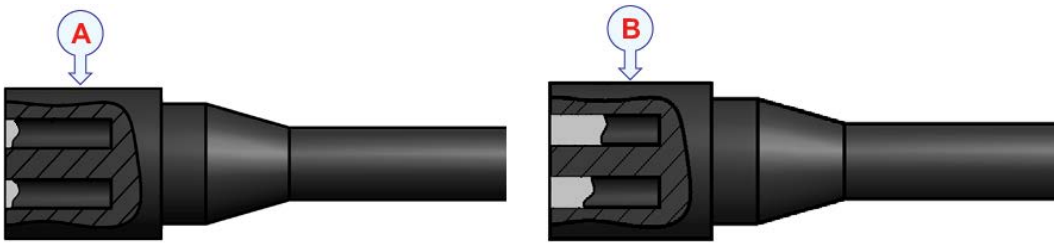

b Completely cover the inner edge of all sockets.

c Leave a thin, transparent layer of grease on the face of the connector (A).

If mating underwater, make sure that all sockets are completely sealed (B).

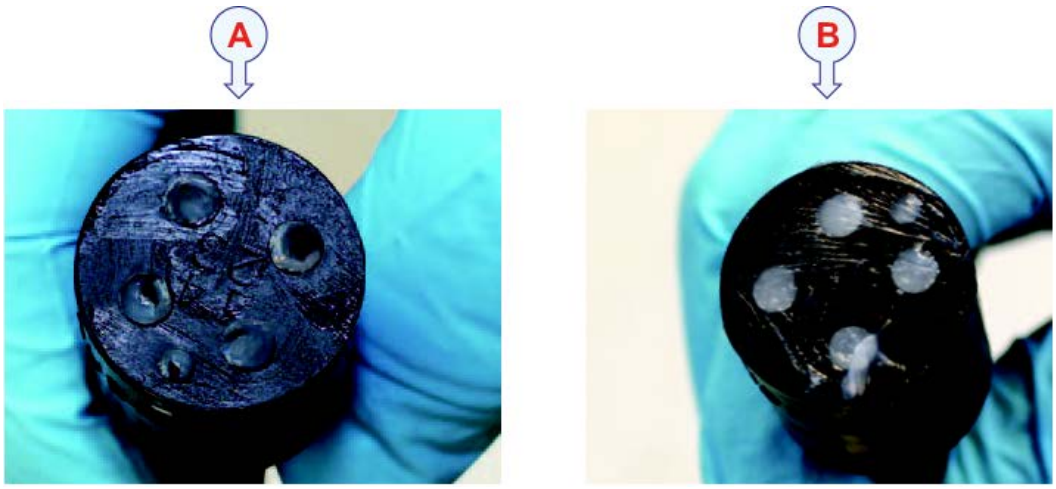

4 Fully mate the male and female connector to secure optimal distribution of grease on pins and in sockets.

Remove any excess grease from the connector joint.

5 Make sure that the grease has been sufficiently applied.

Note

If mating underwater, you can skip this step.

a De-mate and check for grease on every male pin.

b Re-mate the connector.

Cleaning marine growth off the Sonar Head

Marine growth (biological fouling) on the Sonar Head face reduces the M3 Sonar performance. For this reason, it is important to keep the Sonar Head face clean.

Prerequisites

The following tools and consumables are required.

- Personal protection
- Fresh water
- A mild synthetic detergent and a plastic brush
- A piece of wood or plastic without sharp corners
- Citric acid (<50%) (only if required)

Context

During normal use, the Sonar Head is subjected to biological fouling. If this marine growth is excessive, it will reduce the performance of the M3 Sonar. Whenever the opportunity arises, or when due in the maintenance schedule, the Sonar Head face must be cleaned for shells, barnacles, and other marine growth.

Note

It is important to check the Sonar Head for physical damage.

A Sonar Head must always be handled as a delicate instrument. Incorrect actions may damage the Sonar Head beyond repair. Observe these Sonar Head handling rules:

- **Do not** handle the Sonar Head roughly. Avoid impacts.
- **Do not** expose the Sonar Head to direct sunlight or excessive heat.
- **Do not** use high-pressure water, sandblasting, metal tools or strong solvents to clean the Sonar Head face.
- **Do not** lift the Sonar Head by the cables.
- **Do not** step on the Sonar Head cables.

- **Do not** damage the Sonar Head cables, and avoid exposure to sharp objects.

Procedure

1 Allow for sufficient access to clean and inspect the entire surface of the Sonar Head.

2 Remove biological fouling carefully using a plastic brush, a suitable synthetic detergent and fresh water.

Biological material which is strongly rooted in the substrate can be removed carefully with a piece of wood or plastic.

If required, you can also use citric acid. Apply, leave it working for several hours, and rinse thoroughly with fresh water.

Note

Do not *use high-pressure water, sandblasting, metal tools or strong solvents to clean the Sonar Head face.*

3 Allow the Sonar Head surface to dry.

Caution

The Sonar Head must not be exposed to direct sunlight for prolonged periods of time. Prolonged exposure to ultra-violet rays and excessive heat may damage the surface of the polyurethane transducer face.

4 Apply anti-fouling paint as described in the dedicated procedure.

Note

Because some paint types may be aggressive to the polyurethane in the Sonar Head, consult our list of approved paints.

Related topics

Inspecting and cleaning the Sonar Head, page 58
Approved anti-fouling paints, page 73

Painting the Sonar Head

If you are using the Sonar Head in a long-term deployment, marine organisms will stick to the surface of your equipment and flourish, resulting in marine growth. Marine growth (biological fouling) on the Sonar Head face reduces the M3 Sonar performance. We recommend that you paint the Sonar Head face immediately after installation, and then again as often as required to maintain the protection. As part of your maintenance schedule, recover your Sonar Head every year or two and apply a new layer of anti-fouling paint if necessary.

Prerequisites

The following tools and consumables are required.

- Personal protection
- Fresh water
- A mild synthetic detergent and a plastic brush
- Non-abrasive scrub sponge or scour pad suitable for use on Teflon-coated surfaces
- Primer
- Anti-fouling paint
- Wet film gauge

Context

The Sonar Head has not been designed with any protection against biological fouling. Anti-fouling paint may therefore be applied to the Sonar Head face.

To minimize the negative acoustical effects the layer of anti-fouling paint must be as thin as possible.

Note

The anti-fouling paint will reduce the acoustical performance of the Sonar Head. The surface roughness of the Sonar Head substrate and the thickness of the paint may also influence the performance. Kongsberg Mesotech cannot be held responsible for any negative consequences of the anti-fouling paint.

Anti-fouling paint is toxic. Observe the relevant instructions and safety information provided by the paint manufacturer.

Caution

Never paint the anodes.

Procedure

1 Clean the Sonar Head thoroughly.

Make sure that you remove all oil grease residues, as well as salt and other contamination.

2 Allow the Sonar Head surface to dry.

3 If you are repainting over an old coat of paint, prepare the surface as necessary.

a Abrade the surface with a scrub sponge or scour pad.

Note

Do not exceed a surface roughness (R_{max}) of 35 microns as this can influence the M3 Sonar performance.

b Remove all dust.

c Make sure that the paint previously applied to the Sonar Head is compatible with the new paint. If you are not sure if the new paint is compatible, apply a tie coat. Consult the paint manufacturer for a recommended tie coat.

4 Apply the primer, and let it dry.

Caution

Do not use a primer on the black polyurethane transducer surface.

5 Apply the paint. Apply two or three coats, as recommended by the paint manufacturer.

Note

We strongly recommend that you do not use a paintbrush and/or a roller.

Observe the instructions provided by the paint manufacturer. Use airless spray. Apply the minimum specified film thickness per coat and for the complete layer. It is not possible to measure dry film thickness on Sonar Head surface. You must therefore use a wet film gauge to frequently measure the paint thickness.

6 Allow the paint to dry.

Related topics

Preventive maintenance schedule, page 53

Inspecting and replacing the sacrificial anodes

A sacrificial anode must be installed if your Sonar Head has an aluminium housing. Sacrificial anodes are used to protect the Sonar Head from corrosion. Since these anodes are slowly disintegrating during normal wear and tear, they must be replaced when spent.

Prerequisites

- We assume that you are equipped with a standard set of tools. This tool set must comprise the normal tools for mechanical tasks. This includes different screwdriver types, pliers, adjustable spanners, etc.
- You must have installed the plastic isolation pad, which ensures the Sonar Head does not have an electrical connection to the mounting bracket.
- Sacrificial anodes are included with mounting bracket kits, can be purchased from Kongsberg Mesotech, or can be sourced separately.
- You will need an ohmmeter to verify electrical connections and for continuity testing.
- You will need an underwater lubricant (such as AquaShield) to grease the fasteners.

Context

Visually inspect the anode before every survey and each time the Sonar Head is removed from the water, or at one-week intervals (whichever occurs more frequently). Regular maintenance checkups are especially important for long-term deployments of the M3 Sonar.

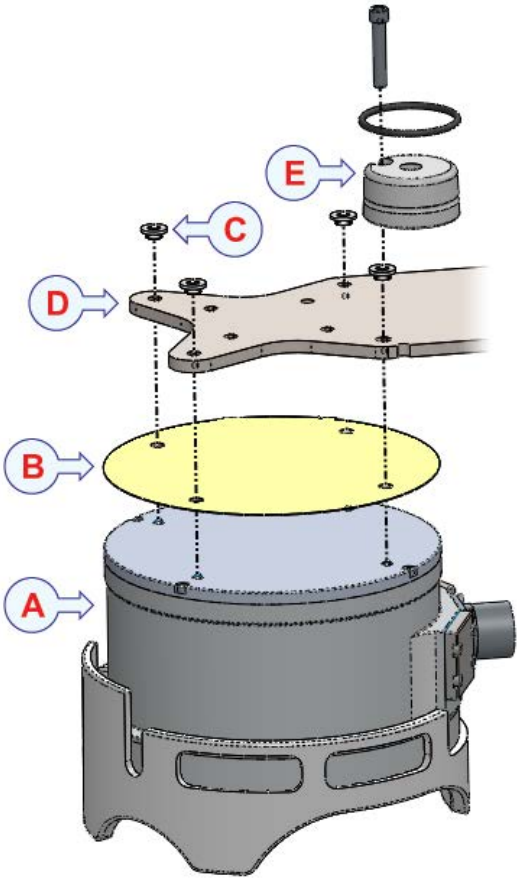

A *Sonar Head*

B *Plastic isolation pad*

C *Plastic shoulder washers*

D *Bracket holes in mounting bracket*

E *Sacrificial anode*

Procedure

1 Access the location of the sacrificial anode.

Mounting brackets provided by Kongsberg Mesotech have a notch next to the hole where the anode should be installed.

2 Inspect the physical condition of the anode.

a If the anode is more than two thirds consumed, the anode must be replaced.

b If the anode still has a “new metal shine”, then it isn’t working. Re-inspect the electrical connections.

3 If necessary, replace the sacrificial anodes with new anodes of the same type.

a Install the anode using a stainless steel fastener (A).

Apply underwater lubricant to the fastener threads before the fastener is inserted.

b If you have other devices installed in close proximity, install the o-ring bumper (B) to prevent anode contact with these devices.

c Use a plastic washer to separate the anode from the mounting bracket.

Caution

If the anode is installed in direct contact with the mounting bracket, it will not work. An electrical connection must be made between the anode and the Sonar Head, not the anode and the mounting bracket.

4 Use your ohmmeter to verify there is electrical connection between the anode and the Sonar Head.

a Measure the connection between the new anode and the metal base of the Sonar Head power/telemetry connector.

Alternatively, measure the connection between the anode and one of the stainless steel fasteners screwed into the housing. If an electrical connection is not being made, the anodizing layer may be present inside the threaded mounting holes. To connect to the untreated aluminium, remove and reinstall the screw to rub off the anodizing layer.

b Verify that you are measuring near zero ohms (and not a high impedance) between the anode and Sonar Head.

Related topics

Inspecting and cleaning the Sonar Head, page 58

Approved anti-fouling paints

This is our list of approved antifouling paints for all Sonar Head types. Always refer to the manufacturer's documentation and data sheets for a complete procedure and for relevant safety information.

Important

Do not paint the Sonar Head with traditional hull plating paint. Use only the correct type of approved paint specified.

Do not use high-pressure water, sandblasting, metal tools or strong solvents to clean the Sonar Head face.

Jotun

- **Manufacturer**: Jotun
- **Address:** P.O.Box 2021, N-3248 Sandefjord, Norway
- **Manufacturer's website**: http://www.jotun.com

Products:

- SeaQuantum Ultra S
  - **Primer**: Safeguard Universal ES

    Apply 80 µm wet film thickness (50 µm dry film thickness).
  - **Paint**: SeaQuantum Ultra S

    Apply 250 µm wet film thickness (125 µm dry film thickness).
- Seaforce 200 AV
  - **Primer**: Safeguard Universal ES AV

    Apply 70 µm wet film thickness (50 µm dry film thickness).
  - **Paint**: Seaforce 200 AV

    Apply 140 µm wet film thickness (90 µm dry film thickness).

Data sheets and application guides can be downloaded from:

http://www.jotun.com/ww/en/b2b/technical-info/tds/index.aspx

International Marine Coatings

- **Manufacturer**: International Marine Coatings
- **Address:** Stoneygate Lane, Felling, Gateshead, Tyne & Wear, NE10 0JY United Kingdom
- **Manufacturer's website**: www.international-marine.com

Products:

- Intersleek 1100SR
  - **Primer**: Intersleek 737

    Apply 50 µm dry film thickness.
  - **Paint**: Intersleek 1100SR

    Apply 150 µm dry film thickness.
- Intersmooth 7465Si SPC
  - **Primer**: Intergard 269

    Apply 40 µm dry film thickness.
  - **Paint**: Intersmooth 7465Si SPC

    Apply 100 µm dry film thickness.

The list can also be found on http://www.simrad.com.

Related topics

Cleaning marine growth off the Sonar Head, page 66

Corrective maintenance

Topics

Replacing the o-ring in the sonar cable connector, page 76

Replacing the retaining ring in a dummy plug, page 81

Splicing the M3 Sonar cable, page 84

Replacing the o-ring in the sonar cable connector

A cable with a 10-pin cable connector connects to the Sonar Head. When installing the M3 Sonar, you must check if the o-ring is properly installed. If the o-ring is missing or damaged, it will need to be replaced.

Prerequisites

Caution

Replacing o-rings must only be done by qualified personnel. An improperly installed o-ring can result in catastrophic failure and permanently damage the underwater equipment.

The following included parts are used when replacing the o-ring.

- M3 Sonar Head
- M3 SEA CON® cable with 10-pin connector
- Replacement o-ring (found in the accessory kit)

The following tools and consumables are not included and must be purchased locally.

- Dove-tail O-ring Installation Tool (DOIT)
- O-ring pick tool
- O-ring grease
- Swabs
- Isopropyl Alcohol

Procedure

1 Remove the o-ring from the Cable Connector Plug.

Use the Parker o-ring picks to extract the o-rings from the Cable Connector Plugs and Flanged Connector Receptacle.

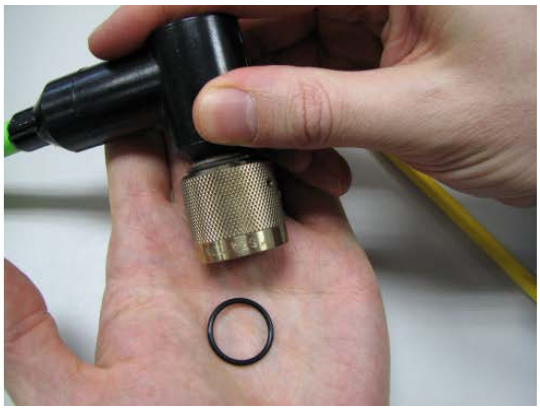

2 Clean the o-ring surface with Q-Tips and Isopropyl Alcohol.

Ensure all dirt, hair, and debris is removed from the o-ring surface.

3 Inspect the o-ring for defects.

Be sure to keep the o-ring free of dirt, hairs, or other contaminants.

4 Grease the replacement o-ring with a small amount of o-ring grease.

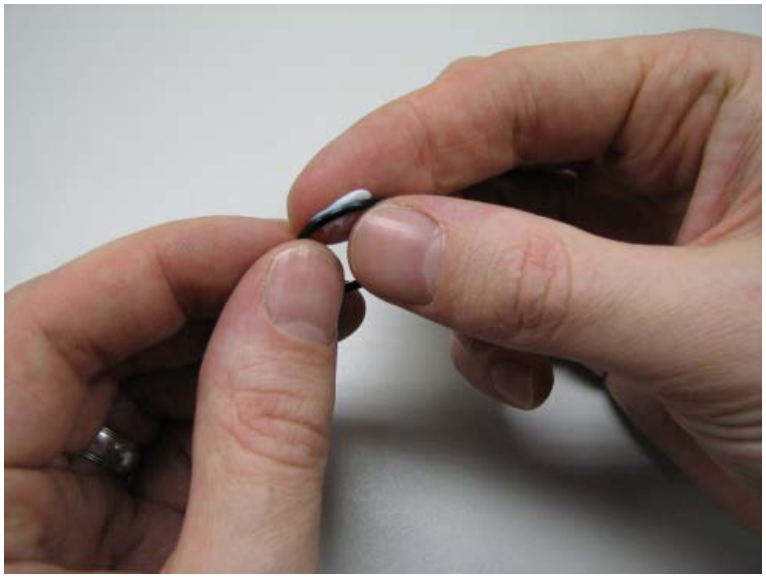

5 Fit the o-ring onto the DOIT and slide it to the end.

6 Using the DOIT, fit the o-ring back onto the Cable Connector Plug or Flanged Connector Receptacle.

Install the o-ring in the Cable Connector Plug by aligning the key and pressing into the connector.

Tip

Rotating the DOIT when pulling it out can help ensure the o-ring stays in place.

Related topics

Inspecting and cleaning the Sonar Head, page 58
Inspecting and cleaning the SEA CON® cable connectors, page 62

Replacing the retaining ring in a dummy plug

If your Sonar Head has ports that are not in use, then a dummy sealing plug will be installed to waterproof the port during submersion. When installing (or removing) the M3 Sonar, check if the retaining ring is damaged or missing — especially if you have been using your M3 Sonar in the field. The retaining ring is a small steel part that can break over a prolonged period through corrosion.

Prerequisites

The following tools and parts are used when replacing the retaining ring.

- Dummy sealing plug
- Replacement retaining ring (can be ordered from Kongsberg Mesotech)
- You will need a pair of retaining-ring pliers.

Context

If the retaining ring (A) breaks off the dummy sealing plug, there will be nothing preventing the engaging nut (B) from being lost, and possibly compromising the effectiveness of the dummy plug when removing it from the mating connector. If the engaging nut does come off, ensure that the two engaging nut washers behind the nut do not come off as well. You will need to replace these washers if they go missing.

Note

If the retaining ring breaks off a SEA CON® cable connected to the Sonar Head, do not attempt to replace it yourself. You cannot install the retaining ring without removing the cable connector. Losing the retaining ring on your cable does not pose any serious risk of equipment damage, although you may need to pull on the cable connector to disconnect it after unscrewing the engaging nut.

You can leave the dummy sealing plug attached to the Sonar Head during the replacement procedure. If it is easier for you to remove the plug, make sure to securely fasten it again afterwards.

Procedure

1 Remove the damaged retaining ring from the dummy plug.

2 Insert the retaining-ring plier tips into the two holes in your replacement retaining ring.

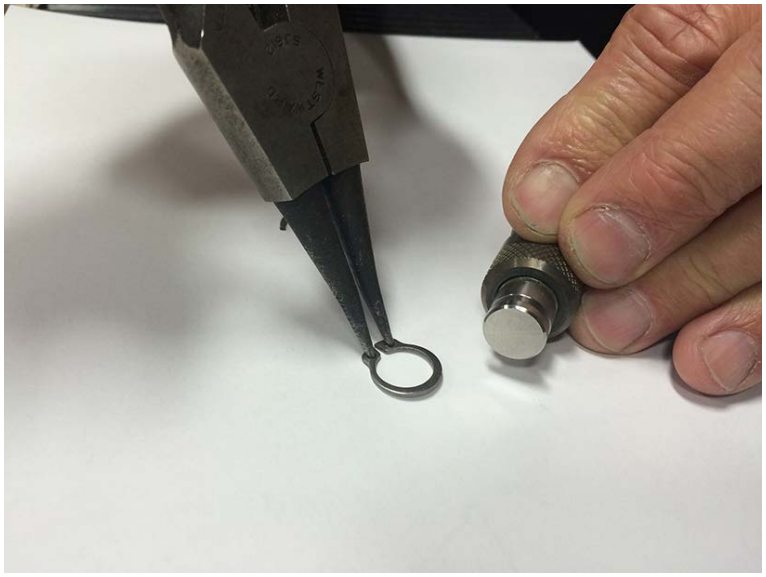

3 Push the tips in as far as possible into the retaining-ring holes before squeezing the plier handles.

4 Using minimal pressure, spread the retaining ring slightly apart and slide it over the end of the dummy plug.

5 Move the retaining ring down to the second notch on the dummy plug (the notch closest to the engaging nut).

6 Slowly release pressure on the pliers and ensure that the retaining ring snaps into the notch.

Related topics

Inspecting and cleaning the Sonar Head, page 58
Inspecting and cleaning the SEA CON® cable connectors, page 62

Splicing the M3 Sonar cable

If you have a damaged subsea cable or cable connector, you can order replacement cables from Kongsberg Mesotech. However, if you need to get your system up and running quickly, you can perform an inline splice as a temporary fix. It is possible to splice the spare 50-ft (or 15-ft) test cable provided with your system, but you risk intermittent telemetry errors if the cable is not terminated correctly. Gigabit Ethernet cables must be terminated to a much higher standard than RS232/422/485 serial cables.

Prerequisites

The following tools and parts are used when splicing a subsea cable.

A *Round-cable stripper, such as the Jonard CST-1900*

B *Side cutters*

C *Wire strippers*

D *Utility knife*

E *Soldering iron with damp sponge*

F *Heat-shrinkable tubing*

G *Hot air gun*

H *Lead-free solder*

I *A vice, clamp, or tweezers to hold the wires to be heated.*

J *Molykote 44 Medium grease (necessary for SubConn cable connectors only)*

K *Scotchcast ™ Flexible Power Cable Inline Splicing Kit 82-F1*

L *A cable tester, such as the Fluke Networks CIQ-100 CableIQ Qualification Tester*

M *Eye protection*

N *Disposable gloves*

O *Test connectors*

- Part number 421-21820000 for Seacon 10-pin connector
- Part number 421-22240000 for SubConn 6-pin connector

Note

The test connectors you need depends on the type of connector you have on your Sonar Head and on how you interface with the topside equipment or ROV.

Tip

Before you start, place your soldering iron in its stand, plug it in, and preheat it so that it will be ready to use later.

Please observe the following safety precautions when performing this procedure.

- Make sure your work area is free from any debris that may prove flammable.
- Make sure your work area is well ventilated. Do not inhale the fumes from the solder.
- Keep loose hair and clothing out of the way.
- Wear eye protection. Solder can “spit”.
- Wear disposable gloves during the potting procedure.
- Always wash your hands with soap and water after soldering.

Procedure

1 Cut back the outer jacket of both cables approximately one inch to expose the inner wires.

a Insert approximately one inch of the cable end into the round-cable stripper.

b Adjust the height of the cable stripper blade so that it will slice through the cable jacket only, and not the inner wires.

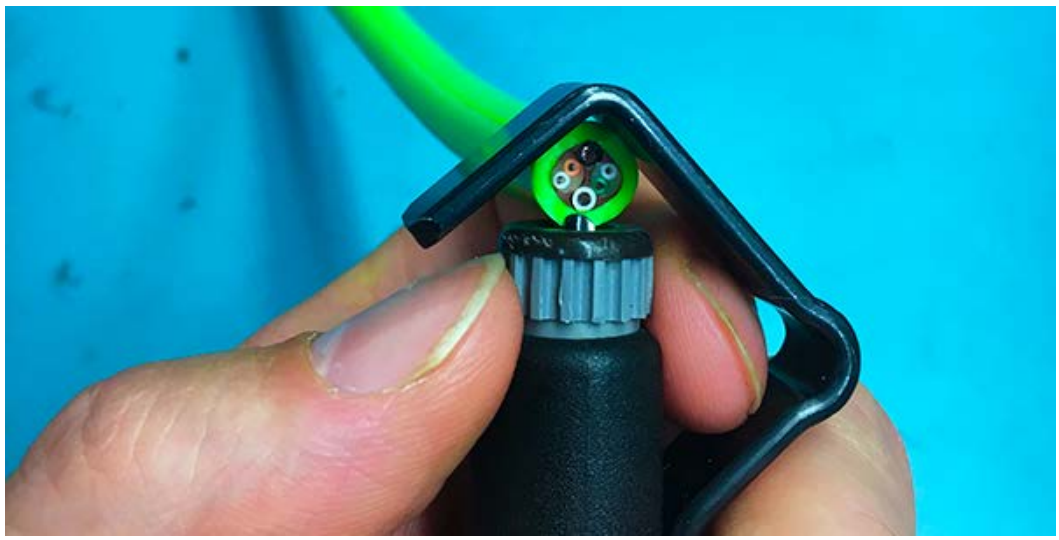

c Spiral the cable stripper around the cable in a circular motion to slice the cable jacket.

d Use the side cutters to cut off the sliced cable jacket.

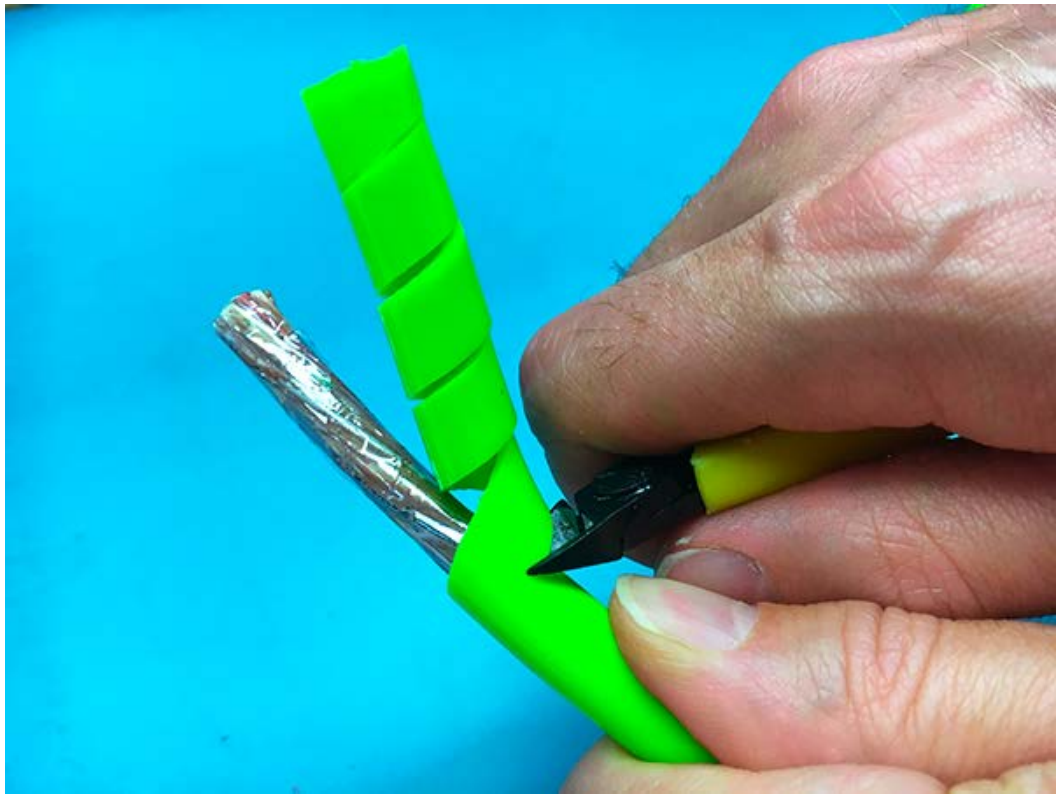

2 Prepare the wires on both cables for soldering.

a Peel and cut off the plastic wrapper (A) from around the inner wires.

b Remove the water block — the brown glue-like substance (B) — from between the wires.

Pull the water block off by hand. It should just crumble off.

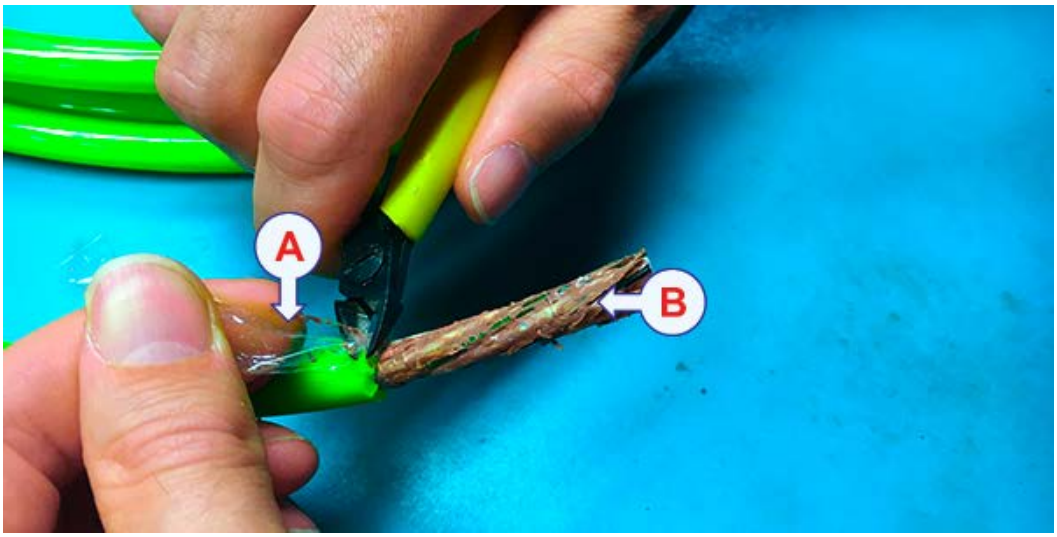

Observe how the coloured Ethernet pairs are twisted around each other and how the twist ratio is different for each Ethernet pair. The two twisted wires assist in decreasing crosstalk. When splicing, try to keep the pairs twisted together in the same way.

Caution

Do not untwist the pairs more than 0.5" for 100 Mbps or 0.375" for 1000 Mbps. A pair untwisted more than half an inch can adversely affect the performance of the entire cable.

c Remove the additional rubber insulation wrapped around each Ethernet pair.

To avoid severing the wires, make a small incision with the side cutters, then peel off the rest by hand.

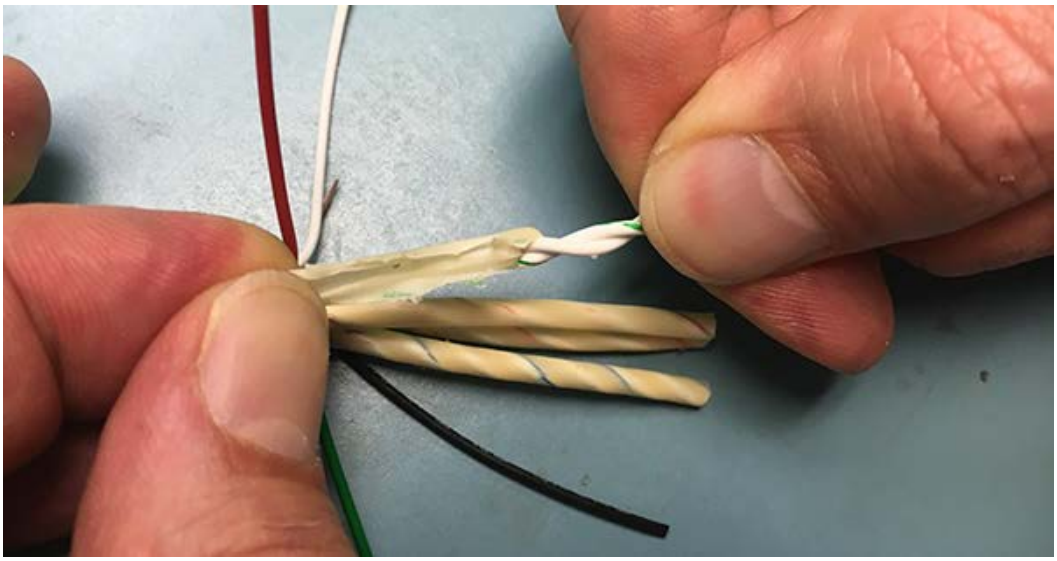

d Using the side cutters, cut each Ethernet pair to a different length so that there will be a 1/4″ spacing between each wire splice.

This spacing is necessary so that the wire splices are not all bunched together (causing a bulge in the cable).

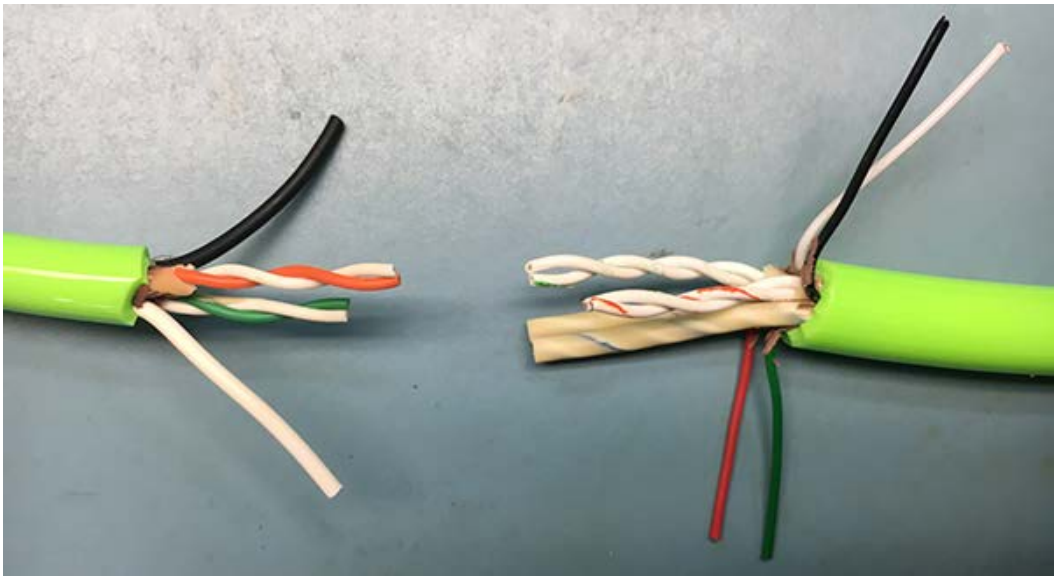

e Use the wire strippers to strip back approximately 1/4″ of insulation from each wire.

Tip

Make sure you match the gauge of the wire with the appropriately-sized hole on the wire stripper or you may cut both insulation and wire.

3 Solder the wires and cover the wire splices with heat shrink.

a Using the soldering iron, apply a light layer of solder to the ends of the wires.

Called “tinning the tips”, this process improves conductivity and makes soldering both quicker and easier.

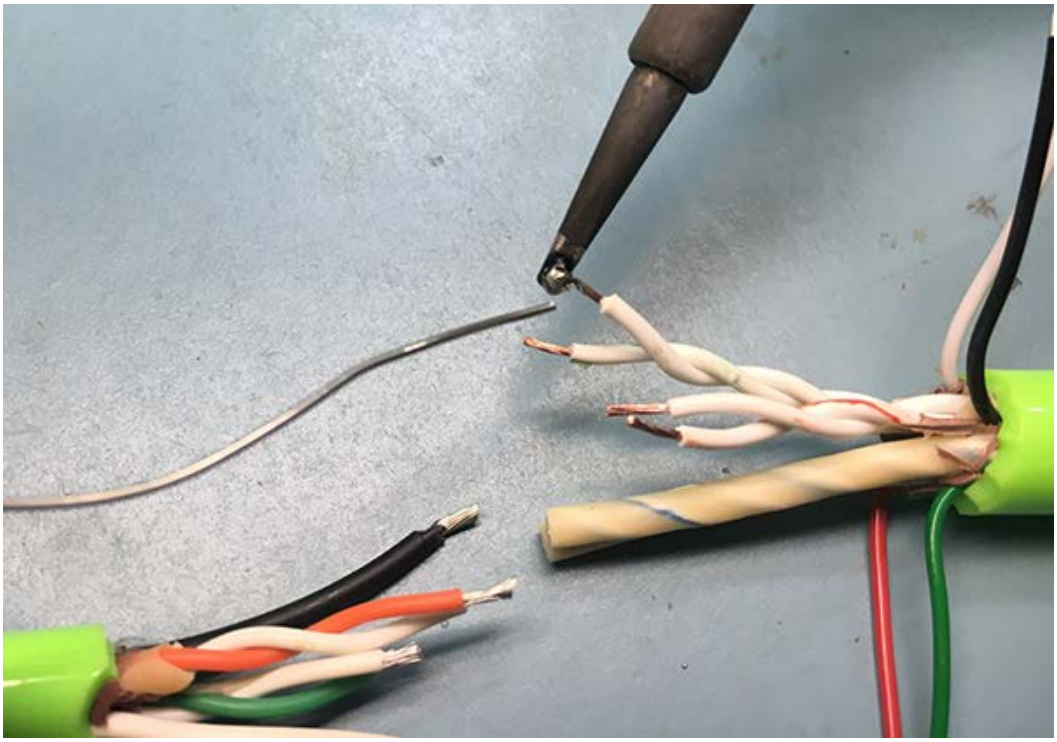

b Using the side cutters, cut the heat-shrink tubes to the right size.

Allow for at least a 1/4″ overlap over the existing insulation.

c Select one of the cables and slide the heat-shrink tubes over the exposed wires.

Move the heat-shrink tubes as far over as you can so that you don't accidentally shrink them when soldering in the next step. Try to twist the Ethernet pairs as they were originally.

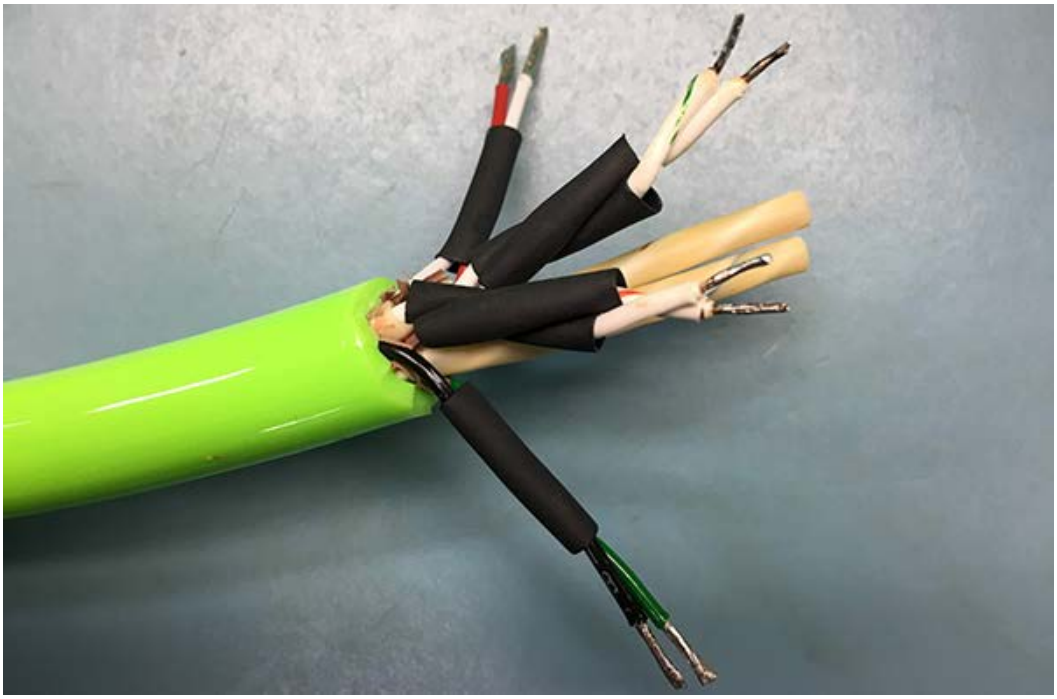

d Refer to the cable pinout diagrams for both cables to identify which wires to solder together.

Tip

Ethernet-pair colours may differ from cable to cable, depending on the cable manufacturer. Use the pinout diagrams to match the pin signal with the colour for each wire.

e Using the soldering iron, solder the appropriate wires together.

Tip

Use the damp sponge to wipe off excess solder. A vice, clamp, or tweezers helps to hold the wires in place.

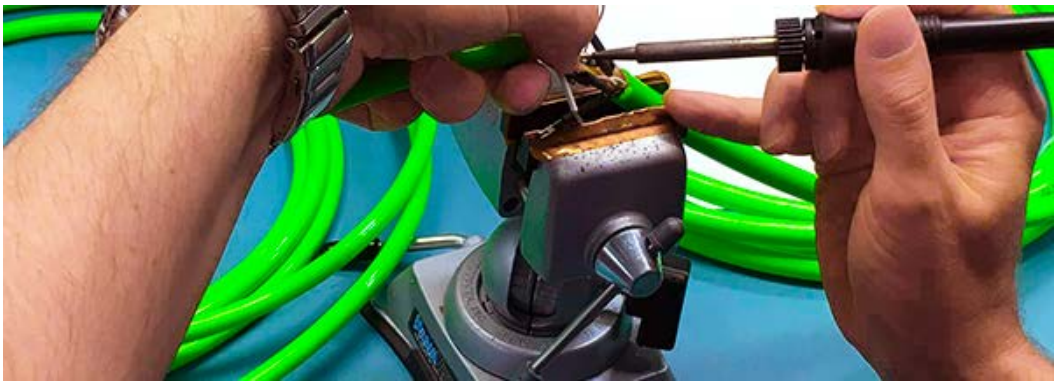

f Move the heat-shrink tubes over to the middle of each join.

g Use the hot-air gun to shrink the tubing.

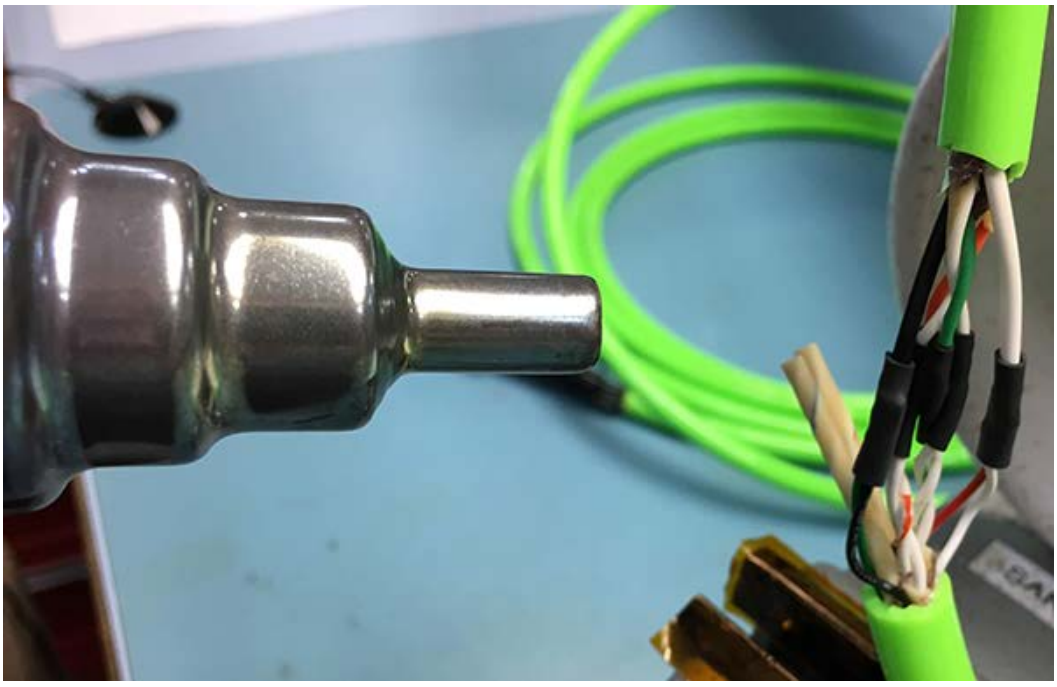

4 Use a cable tester to make sure the electrical connections in the cable are good.

a Mate the appropriate test connectors to either end of the spliced cable.

Note

SubConn cable connectors must be greased before mating (grease at least 1/10 of the socket depth on the female connector).

For Seacon connectors, make sure that the o-ring is not missing. Line up the pins and tighten the locking sleeve.

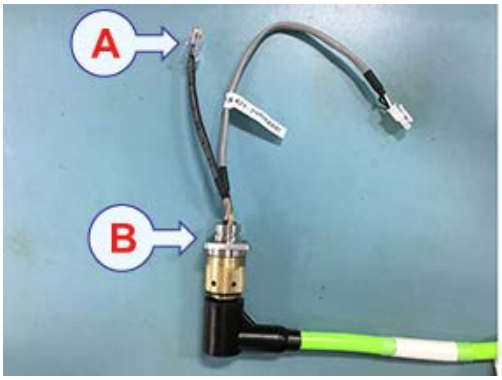

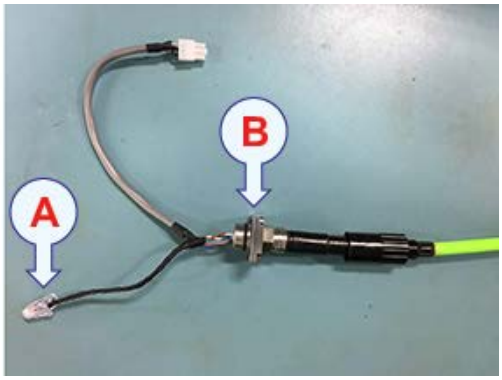

b Detach the wiremap adapter from the cable tester.

c Plug one of the RJ45 connectors (A) on a test connector (B) into the RJ45 socket on the wiremap adapter.

Note

It doesn't matter which cable end you connect to the wiremap adapter.

d Plug the other RJ45 connector on the test connector (on the other end of the spliced cable) into the RJ45 socket on the top of the cable tester.

e Press the green button to turn on the cable tester.

f Turn the rotary switch to **DISCOVER**.

g Make sure that the wiremap diagram looks good, with no open pins in any of the Ethernet pairs.

Note

The wiremap only shows the Ethernet pairs used for data transmission, not the two wires that carry electrical current.

h Turn the rotary switch to **AUTOTEST**.

i Press the white **TEST** button.

j Observe the test results and make sure that the *100BASE-TX* test passed.

k Turn off the cable tester and unplug the test connector.

5 Pot the cable splice with the splicing kit.

a Unpack the contents of the splicing kit.

WARNING

Read all the Material Safety Data Sheet information supplied with the splicing kit before using.

Contents include a mold, a bag of flame-retardant compound, rubber splicing tape, and an abrasive cloth.

Tip

Do not dispose of the cardboard carton — you will need it later.

b Using the abrasive cloth, scuff the ends of the cable outer jackets.

c Using the utility knife, cut the tapered ends of the mold to fit the cable diameter.

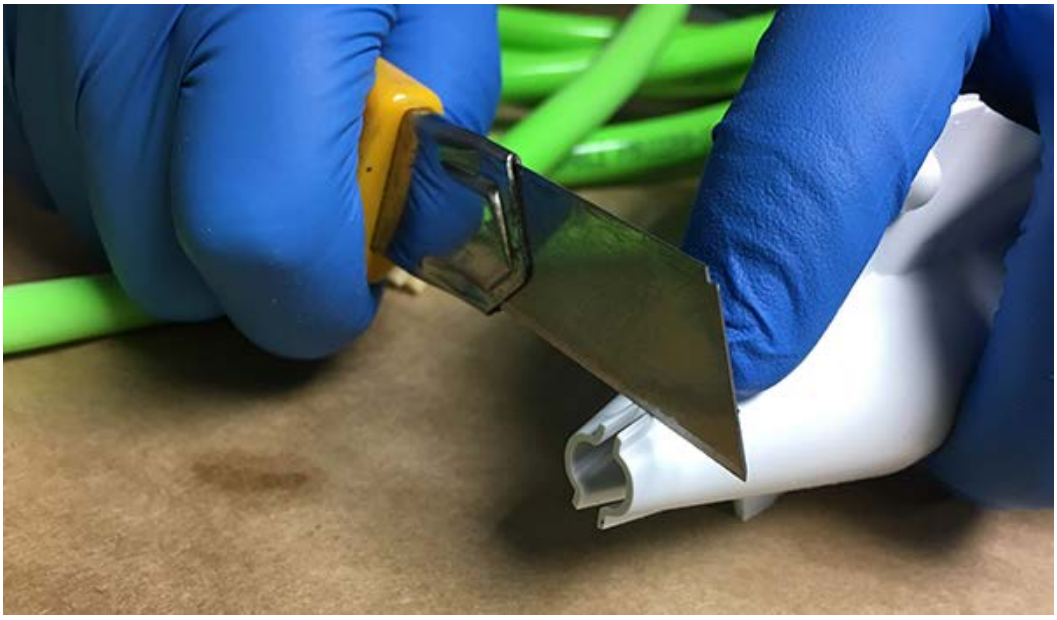

d Tape the spliced wires together to keep them in position.

e Place the cable into the mold with the splice at the centre.

f Close the mold, then tape the ends of the mold onto the cable.

g Cut a slit into the top of the cardboard carton and place the mold's hinge into it. The carton will hold the splice in position for compound pouring.

h Prepare the flame-retardant compound.

- Remove the plastic pouch from the paper bag.
- Squeeze the black side of the pouch to a smooth consistency and uniform colour.
- Pull the middle of the pouch apart to break the seal inside.

- Knead the pouch to mix the contents.

  Important

  Mix until the colour is completely uniform. Do not exceed one minute.

- Squeeze the compound away from the corners of the pouch.

i Cut off a corner of the pouch and immediately pour the compound into the mold. Fill the mold until the compound reaches the mold's filler spout.

j Allow the compound to cure (from 16 to 36 hours, depending on the room temperature).

6 De-mold the cable splice.

a Remove the splicing tape from the mold ends.

b Remove the mold.

Start by separating the mold halves at the filler spout.

c Trim off the excess compound from the filler spout by cutting it off at the base.

7 Test the electrical connections again using the cable tester and make sure that it is ready for use.

Spare parts and consumables

Topics

Ordering spare parts, page 104

Spare parts categories, page 104

List of spare parts, page 105

Ordering spare parts

To make the order process as short and efficient as possible, you must provide accurate information about the product, the part you need, and yourself.

The following information must be provided with your order:

- Part name and/or description
- Our part number
- Number of items required
- Your shipment address
- Preferred shipment method
- Required date of delivery from us

For certain spare parts (typically complete units, printed circuit boards and software) the vessel name is also useful, as this allows us to update our vessel database.

Spare parts categories

Spare parts are divided into three different categories according to their interchangeability record.

- **Consumable**

  These are parts whose usefulness slowly degrades over time during usage. Eventual complete failure is expected and must be planned for. Replacement parts should be kept on-hand in stock.

- **Critical**

  These are parts that the likelihood of failure is possible and the consequences of the failure are immediate. The consequences of failure could be unsafe conditions or loss of use for operation or production. Receipt of replacements is 24 hours or more.

- **Non-critical**

  These are parts whose failure is not expected or is gradual while effectiveness of the part slowly degrades. The consequences of failure is less efficient operation until complete failure occurs. The replacement of these items can be anticipated and planned for with preventive maintenance and planned shutdowns.

List of spare parts

Topics

Sonar Head, page 105

Cables, page 106

Power supply, page 108

Tools and consumables, page 109

Mounting brackets, page 110

Sonar Head

The Sonar Head includes transmit and receive transducers and the electronics to generate the transmit pulse and digitize the received signal.

If the o-ring is missing or damaged, it will need to be replaced. Replacing o-rings must only be done by qualified personnel. An improperly installed o-ring can result in catastrophic failure and permanently damage the underwater equipment.

If your Sonar Head has an aluminium housing, then you will need to install the four plastic shoulder washers and plastic isolation pad found in your Sonar Head accessory kit. A sacrificial anode must be installed if your Sonar Head has an aluminium housing.

Description	Kongsberg Part Number
500m M3 Sonar Head	922-20010000
500m M3 Sonar Head with Synchronization	922-20050000
500m M3 Sonar Head with VDSL	922-20100000
500m M3 Sonar Head with Synchronization and VDSL	922-20130000
500m M3 Sonar Head with Synchronization and 1PPS	922-20220000
500m M3 Sonar Head with SUBCONN connector (6–pin)	922-20160000
500m M3 Sonar Head with SUBCONN connector (13-pin)	922-20170000
4000m M3 Sonar Head	922-20020000
4000m M3 Sonar Head with SEANET connector	922-20040000
4000m M3 Sonar Head with Synchronization	922-20060000
4000m M3 Sonar Head with VDSL	922-20110000
4000m M3 Sonar Head with Synchronization and VDSL	922-20140000

Description	Kongsberg Part Number
M3 Sonar Head Accessory Kit	422-44040000
M3 Sonar Head Guard Ring	359-01320000
Sacrificial anode (for use with the aluminium versions of the M3 Sonar Head)	355-03900000
1/4-20 x 1 3/8, 316 SS Hex socket cap screw (screw for anode)	171-01042202
Stainless Steel KM Rotator Accessory Kit (OE10-102/103)	422-44270000
Titanium KM Rotator Accessory Kit (OE10-102/103)	422-44280000
M3 Sonar software and documentation on USB flash drive	450-00760000
Sonar Head receive firmware file (.RXF) and Sonar Head software file (.ASW)	320-27701000
Sonar Head transmit firmware file (.TXF)	320-27801000
Small M3 Sonar case for Sonar Head and accessories	422-44110000
Large M3 Sonar case for Sonar Head, accessories, and cables	422-44100000

The following parts are not manufactured by Kongsberg Mesotech, but can be ordered from us using our part number. The manufacturer's part number is also provided if you wish to source these parts directly from the manufacturer.

Description	Kongsberg Part Number	Manufacturer	Manufacturer Part Number
Spare o-ring (2-011) for MIND-FCRL	172-01013401	Parker	2-011/N1470
Spare o-ring (2-016) for MINK-FCRL	172-01010201	Parker	2-016/N1470
Plastic Splashproof Plug MINK-PSPL — mates to MINK-FCRL	144-07650005	SEA CON®	MINK-PSPL
Dummy Sealing Plug for MIND-DSPL	144-07660011	SEA CON®	MIND-DSP
Dummy Sealing Plug for MINK-DSPL	144-07660019	SEA CON®	MINK-DSPL
M3 Sonar Head Protective Cover	159-05000002	CFP Industries	VC-7500-32
CORCOM RFI Power Line Filter for DC Applications	N/A	CORCOM	15DCF10
9/32 ID x 5/8 OD x 1/16 thick Peek Flat washer (Isolation washer for anode)	171-02050105	McMaster	93785A600

Cables

Most high speed connections are made using Ethernet cables. The M3 Sonar must use T568B termination for RJ45 connections on both ends of the cable.

The Sonar Head cables are intended for underwater use and include both power and Ethernet telemetry connections for the Sonar Head. The SEA CON® underwater connectors are a

dry-mate style and must be mated or unmated at the surface. The SubConn® underwater connectors are a wet-mate style and can be mated or unmated at the surface or underwater.

Description	Kongsberg Part Number
15-ft (4.5 m) M3 Sonar Ethernet/Power Cable Whip with SEA CON® MINK-10-CCPL connector	436-02380000-0015
50-ft (15 m) M3 Sonar Ethernet/Power Cable Whip with SEA CON® MINK-10-CCPL connector	436-02380000-0050
50-ft (15 m) M3 Sonar Ethernet/Power Cable Assembly with SEA CON® MINK-10-CCPL connector	436-02390000-0050
20-ft (6 m) M3 Sonar Sync Cable Whip with SEA CON® MIND-4-CCP connector	436-02830000-0020
4-ft (1.2 m) M3 Sonar dual-head sync Cable Assembly with SEA CON® MIND-4-CCP connector	436-02810000-0004
50-ft (15 m) M3 Sonar Ethernet/Power Cable Assembly with SubConn® MC-IL-6F to RJ45/DC Jack connector	436-03110000-0050
15-ft (4.5 m) M3 Sonar Ethernet/Power Cable Whip with SubConn® MCOM6F connector	436-03120000-0015
50-ft (15 m) M3 Sonar Ethernet/Power Cable Assembly with SubConn® DIL13F to RJ45/DC Jack connector	436-03140000-0050
15-ft (4.5 m) M3 Sonar Ethernet/Power Cable Assembly with SubConn® DIL13F connector	436-03150000-0015
50-ft (15 m) M3 Sonar Ethernet/Power Cable Assembly with SEA CON® MINK-10-CCPL to Breakout box connector	436-03350000-0050
M3 Sonar Cable Accessory Kit for Breakout box (North America/Europe/UK)	422-44350000
M3 Sonar Cable Accessory Kit (Ethernet – North America)	422-00770000
M3 Sonar Cable Accessory Kit (Ethernet – Europe)	422-00780000
M3 Sonar Cable Accessory Kit (Ethernet – UK)	422-00790000
M3 Sonar Cable Accessory Kit (VDSL – North America)	422-44230000
M3 Sonar Cable Accessory Kit (VDSL – Europe)	422-44220000
M3 Sonar Cable Accessory Kit (VDSL – UK)	422-44210000

The following parts are not manufactured by Kongsberg Mesotech, but can be ordered from us using our part number. The manufacturer's part number is also provided if you wish to source these parts directly from the manufacturer.

Description	Kongsberg Part Number	Manufacturer	Manufacturer Part Number
Spare o-ring (2-012) for MIND-CCP	172-01006201	Parker	2-012/N1470
Spare o-ring (2-017) for MINK-CCP	172-01011201	Parker	2-017/N1470
Plastic Splashproof Receptacle	144-07650004	SEA CON®	MINK-PSRL

Description	Kongsberg Part Number	Manufacturer	Manufacturer Part Number
RJ45 CAT6 Connector jack (for the M3 Sonar Ethernet/Power Cable Whip with SEA CON® connector)	144-07650054	HARTING	094545215601
Connector cap for RJ45 jack (for the M3 Sonar Ethernet/Power Cable Whip with SEA CON® connector)	144-07650055	HARTING	09455020000
RJ45 CAT5E&6 Crimp Connector plug (Requires crimp tool for RJ45 plug)	140-0751	BOMAR	300668EZ
CAT6 Unshielded Jack — tool free (for the M3 Sonar Ethernet/Power Cable Whip with SEA CON® connector)	140-08000014	ASSMANN	DN-93601-U/BL
Category 5e Connector Socket (for the M3 Sonar Ethernet/Power Cable Whip with SEA CON® connector)	N/A	Panduit	CJ5E88TG
Tool to assemble Panduit CJ5E88TG (for the M3 Sonar Ethernet/Power Cable Whip with SEA CON® connector)	N/A	Panduit	EGJT
Power Jack (ID = 2.1 mm, OD =5.5 mm)	140-08000015	SwitchCraft	L722AS
Protective cover for Power Jack L722AS	140-08000016	SwitchCraft	JCAP
3/4 in x 18 in velcro strap	159-00510004	Panduit	HLSP5S-X12

Power supply

The Sonar Head requires a DC power supply to run.

A test cable and power supply is available for order as an accessory.

Description	Kongsberg Part Number
M3 Test Power Supply (90-264 VAC to 24 VDC) with two-pin Bulgin connector	436-03380000

The following parts are not manufactured by Kongsberg Mesotech, but can be ordered from us using our part number. The manufacturer's part number is also provided if you wish to source these parts directly from the manufacturer.

Description	Kongsberg Part Number	Manufacturer	Manufacturer Part Number
6-ft 125V/10A AC power cable — North America (NEMA1-15 plug to IEC60320 C7 connector)	154-02900012	PHIHONG USA QUALTEK	AC15WNA-R 223020-01
6-ft 250V/2.5A AC power cable — Europe (CEE 7/16 plug to IEC60320 C7 connector)	154-02900013	PHIHONG USA	AC15WEU

Description	Kongsberg Part Number	Manufacturer	Manufacturer Part Number
6-ft 250V/2.5A AC power cable — UK (BS1363A plug to IEC60320 C7 connector)	154-02900014	PHIHONG USA	AC15WUK
Circular DC Power Plug connector (2.1mm, 5.5mm)	144-07650009	Switchcraft	767KS15
Filter for Sonar Head input power	N/A	CORCOM	3EZ1

Tools and consumables

You may require one or more special tools to perform a specific task. These are specified in the relevant procedure. Consumables deplete over time during usage. Replacement parts should be kept on-hand in stock.

The following parts are not manufactured by Kongsberg Mesotech, but can be ordered from us using our part number. The manufacturer's part number is also provided if you wish to source these parts directly from the manufacturer.

Description	Kongsberg Part Number	Manufacturer	Manufacturer Part Number
Plastic o-ring extraction tool	159-04000609	Parker	PLASTIC O-RING PICK
Dove-tail o-ring Installation Tool (DOIT) for o-ring installation in the MIND CCP/CCPL (Cable Connector Plug)	159-04000621	SEA CON®	MIND-DOITHANDLE
Dove-tail o-ring Installation Tool (DOIT) for o-ring installation in the MINK CCP/CCPL (Cable Connector Plug)	159-04000613	SEA CON®	MINKDOITH-ANDLE
Silicon o-ring grease	159-0002B	Dow Corning	55-150G(1916 564)
1/4 oz tube of Nickel Anti-seize Lubricant	159-0072	McMaster-Carr	10295K29
4 fl-oz of silicon o-ring grease	159-0074	Parker	OL400
5.50 oz tube of water-resistant grease	159-0079	D.A. Stuart	AquaShield
9 oz can of Nickel Anti-seize Lubricant	159-04000602	Loctite	LCT51605
Digital Multi-Meter (DMM)	N/A	Fluke	Fluke 87V/AEK
Fluke CableIQ™ Ethernet Cable Qualification Tester	N/A	Fluke	CIQ-100
DTX CableAnalyzer™ Ethernet Cable Certification Tester	N/A	Fluke	DTX-1800
Crimp tool for RJ45 plug	N/A	Eagle Plastic Devices	382-2094C

Mounting brackets

The Sonar Head is designed to attach to a mounting bracket. The type of mounting bracket you need depends on how you intend to deploy the sonar.

You can order a mounting bracket from Kongsberg Mesotech, or you can make your own.

Description	Kongsberg Part Number
M3 Sonar Head to Rotator (OE10-102 / OE10-103) Stainless Steel Bracket Kit	422-44050000
Pole Mount to Rotator (OE10-103) Stainless Steel Bracket Kit	422-44060000
Pole Mount to Rotator (OE10-102) Stainless Steel Adapter Plate Kit	422-44070000
15° Tilt Sonar Head to Pole Mount Stainless Steel Bracket Kit	422-44120000
Downlooking Sonar Head to Pole Mount Stainless Steel Bracket Kit	422-44130000
10° Tilt Sonar Head to Pole Mount Stainless Steel Bracket Kit	422-44140000
0° Tilt Sonar Head to Pole Mount Stainless Steel Bracket Kit	422-44150000
Dual Axis Pole Mount to M3 Sonar Head Bracket Kit	422-44170000
45° Tilt Bracket Kit to M3 Sonar Head	422-44190000

Cable layout and interconnections

Topics

Read this first, page 112

Cable plan, page 113

List of M3 Sonar cables, page 114

Focal multiplexer compatibility table, page 115

Cable drawings and specifications, page 116

Basic cable requirements, page 123

Read this first

Detailed information about cable specifications, termination and connectors is provided. Unless otherwise specified, all cables are supplied by Kongsberg Mesotech as a part of the M3 Sonar delivery.

Kongsberg Mesotech Limited accepts no responsibility for damage to the system, or reduced operational performance, when this is caused by improper wiring.

Note

Before you install or maintain the M3 Sonar cables, make sure that the AC mains circuit breaker for the system is switched off.

Cable plan

The cables are part of the delivery with the main units.

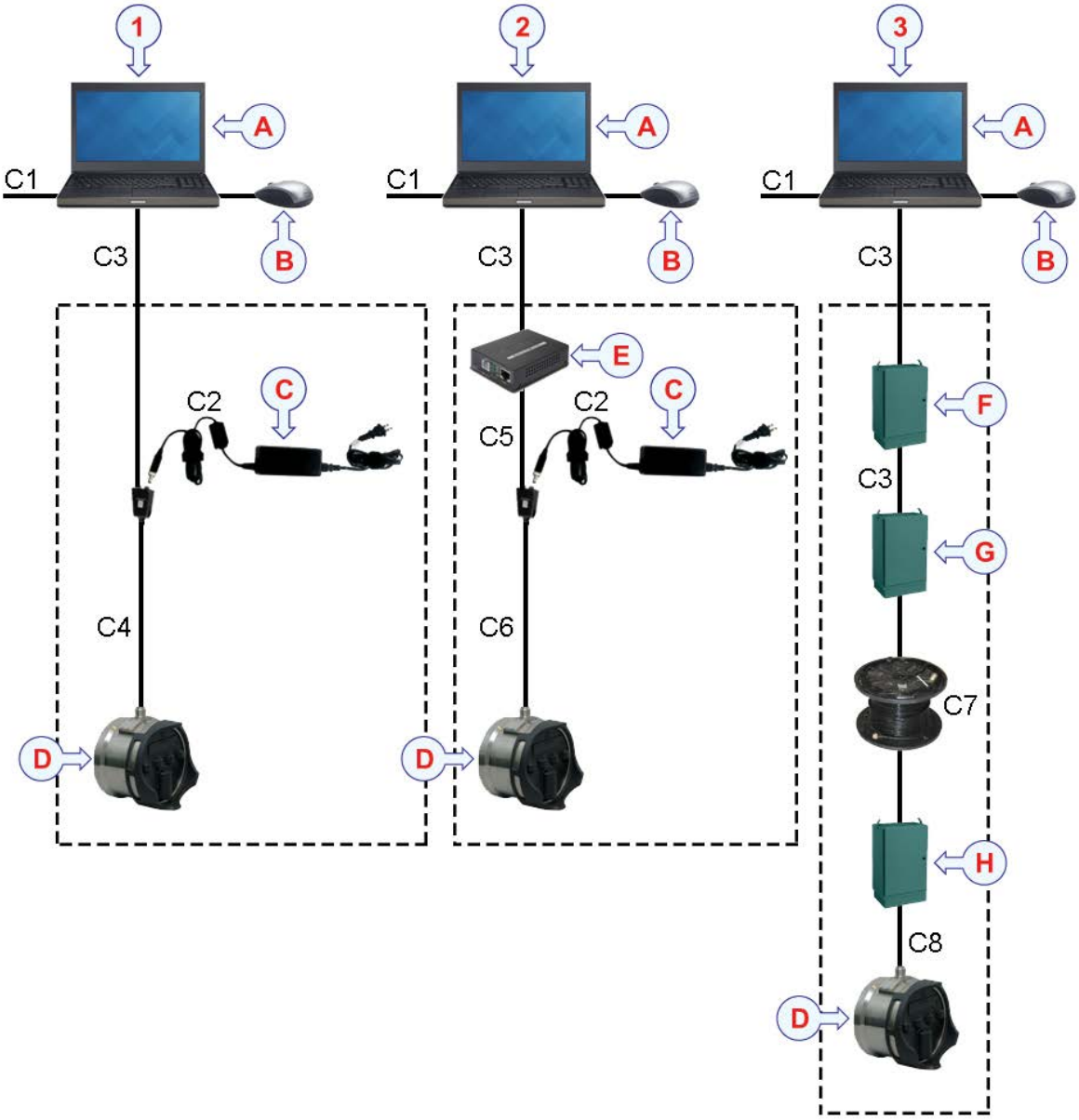

This diagram shows three deployment examples.

1 Basic system interconnection (for setting up a bench test, for example)

2 VDSL system interconnection

3 Remotely Operated Vehicle (ROV) system interconnection

A *Sonar Processor*

B *Mouse*

C *M3 Power Supply*

D *Sonar Head*

E *VDSL Modem*

F *Control Room Junction Box*

G *Winch Junction Box*

H *ROV Junction Box*

Note

When deployed on an ROV, the ROV Junction Box normally supplies power to the Sonar Head (10 to 36 VDC).

List of M3 Sonar cables

A set of cables is required to connect the M3 Sonar units to each other, and to the relevant power source(s).

Cable	Description	From	To
C1	AC power	Sonar Processor AC-to-DC power supply	Uninterruptible power supply / Ship supply
C2	AC power	DC connector on M3 Cable	M3 Power Supply
C3	Ethernet	Sonar Processor	Telemetry connector (RJ-45 female socket) on M3 Cable / Modem / Junction Box
C4	Ethernet M3 Cable	Power and telemetry connectors on Ethernet M3 Cable	Sonar Head
C5	RJ11 patch cable	VDSL Modem	Telemetry connector (RJ-45 female socket) on M3 Cable
C6	VDSL M3 Cable	Power and telemetry connectors on VDSL M3 Cable	Sonar Head
C7	Umbilical system	Winch Junction Box	Remotely Operated Vehicle (ROV) Junction Box
C8	Ethernet M3 Cable	Remotely Operated Vehicle (ROV) Junction Box	Sonar Head

Focal multiplexer compatibility table

If you are installing the M3 Sonar on a Remotely Operated Vehicle (ROV), make sure that your Focal fiber-optic multiplexer is supported. In general, any multiplexer will work over four wires if gigabit Ethernet negotiation has been disabled.

Focal Mux	Compatible?	Description
903 FMB-X	Yes	Links at 100 Mbps.
907 GBE	Yes	Rev 4 and later have dip switches to force the link to 100 Mbps operation.
907 GBES	No	Cannot negotiate on four wires.
907 GBE2	Yes	Only with firmware Rev A3 or newer (2018-03). Takes 30 seconds to link after 7 attempts at gigabit speed.
907 GEM	Yes	Requires 907 DIAG-E to remove 1000 BASE-T negotiation setting.
907 E	Yes	The 625M version works out of the box. The 2.5G version must have 1000 BASE-T negotiation setting disabled either via the GUI or via the dipswitches on the board. This applies to both remote and console boards to ensure both sides are linked at 100 Mbps.
914-HDE	Yes	You must alter the negotiation settings via diagnostics to remove 1000 BASE-T. Diagnostics is included with every 914-HDE system. 1000 BASE-T is off by default with L1 systems.
914-EX	Yes	You must alter the negotiation settings via diagnostics to remove 1000 BASE-T. Diagnostics is included with every 914-EX.
914-GBE	No	Will not link.

Related topics

Sonar Head connection failure detection, page 25

Cable drawings and specifications

Topics

Ethernet cable, page 117

Sonar Head - SEA CON MINK-10-CCPL: Power and Ethernet, page 118

Sonar Head - SEA CON MINK-10-CCPL:Power, Ethernet, 1PPS, and Sync, page 118

Sonar Head - SEA CON MIND-4-CCP: Synchronization, page 119

Sonar Head - SeaNet: Power and Telemetry, page 119

Sonar Head - SEA CON MINK-10-CCPL: Power, Ethernet 10/100, and VDSL, page 120

Sonar Head - SubConn MCOM6F: Power and Ethernet, page 120

Sonar Head - SubConn DIL13F: Power and Ethernet, page 121

Sonar Head - SubConn MCIL8F: Power and Ethernet, page 121

Ethernet cable

Most high speed connections are made using Ethernet cables. The M3 Sonar must use T568B termination for RJ45 connections on both ends of the cable.

A *Local Ethernet connection*

B *Connection on external network device*

Ethernet cables are available commercially in different lengths, colours and categories. Normally, CAT-5E and CAT-6 cables are used in local area networks with bandwidths exceeding 100 Mbit.

Note

It is very important that high-quality Ethernet cables are used. You must use CAT-5E quality or better. If you use cables with lower bandwidth capacity you will reduce the M3 Sonar performance.

For 100Base-TX connections only Orange, Orange-White, Green, and Green-White are required. No cross-over is required for 100Base-TX direct pier to pier connections with the M3 Sonar.

Minimum cable requirements

Not applicable. This is a commercial cable.

Sonar Head - SEA CON MINK-10-CCPL: Power and Ethernet

This rugged cable is intended for underwater use and includes both power and Ethernet telemetry connections for the Sonar Head. The underwater connector is a dry-mate style and must be mated or unmated at the surface.

Pin Functions

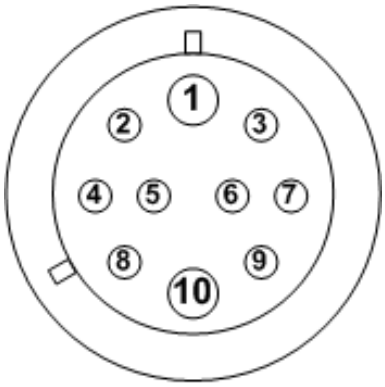

- **Pin 1**: Pri_Power (+12 to +36 VDC)
- **Pin 2**: BI_DA+ (orange/white)
- **Pin 3**: BI_DC- (blue/white)
- **Pin 4**: BI_DA- (orange*)
- **Pin 5**: BI_DB+ (green/white)
- **Pin 6**: BI_DC+ (blue*)
- **Pin 7**: BI_DD+ (brown/white)
- **Pin 8**: BI_DB- (green*)
- **Pin 9**: BI_DD- (brown*)
- **Pin 10**: Pri_Power_Return (0 VDC)

* *Colour may be white in some cases — for example, as with Falmat FM022208-10 cables*.

Sonar Head - SEA CON MINK-10-CCPL: Power, Ethernet, 1PPS, and Sync

This rugged cable is intended for underwater use and includes both power and Ethernet telemetry connections for the Sonar Head. The underwater connector is a dry-mate style and must be mated or unmated at the surface.

Pin Functions

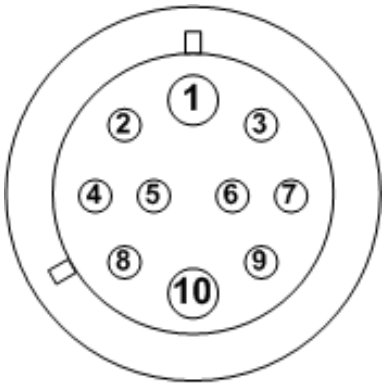

- **Pin 1**: +V (20 AWG)
- **Pin 2**: TX+ (white/orange)
- **Pin 3**: 1PPS (white/blue)
- **Pin 4**: TX- (white)
- **Pin 5**: RX+ (white/green)
- **Pin 6**: 1PPS GND (white)
- **Pin 7**: SYNC (white/brown)
- **Pin 8**: RX- (white)
- **Pin 9**: SYNC GND (white)
- **Pin 10**: -V (20 AWG)

Sonar Head - SEA CON MIND-4-CCP: Synchronization

This is an optional cable only used if you have purchased a Sonar Head that supports synchronization.

Pin Functions

- **Pin 1**: DGND (white)
- **Pin 2**: PRI_SYNC (green)
- **Pin 3**: DRAIN (shield)
- **Pin 4**: 1PPS_SYNC (orange)

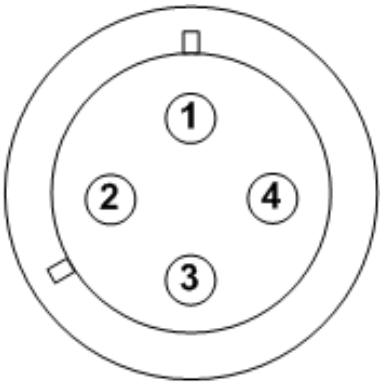

Sonar Head - SeaNet: Power and Telemetry

This rugged cable is intended for underwater use and includes both power and Ethernet telemetry connections for the Sonar Head. The SeaNet connector is only available on the 4000 m version of the M3 Sonar.

Pin Functions

- **Pin 1**: Pri_Power (+12 to +36 VDC)
- **Pin 2**: Pri_Power_Return (0 VDC)
- **Pin 3**: N/C
- **Pin 4**: TD- (green)
- **Pin 5**: TD+ (green/white)
- **Pin 6**: RD- (orange)
- **Pin 7**: RD+ (orange/white)

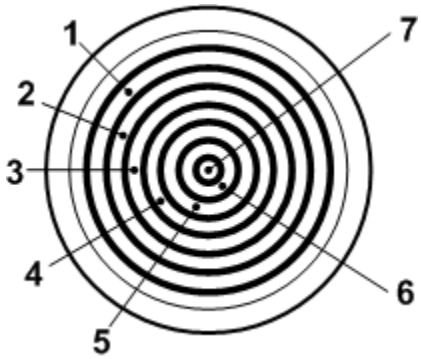

Sonar Head - SEA CON MINK-10-CCPL: Power, Ethernet 10/100, and VDSL

This rugged cable is intended for underwater use and includes both power and Ethernet telemetry connections for the Sonar Head. The underwater connector is a dry-mate style and must be mated or unmated at the surface.

Pin Functions

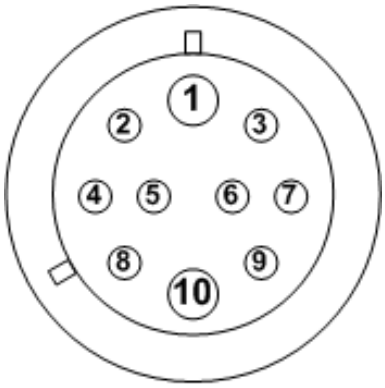

- **Pin 1**: Pri_Power (+12 to +36 VDC)
- **Pin 2**: BI_DA+ (orange/white)
- **Pin 3**: VDSL+ (blue/white)
- **Pin 4**: BI_DA- (orange)
- **Pin 5**: BI_DB+ (green/white)
- **Pin 6**: VDSL- (blue)
- **Pin 7**: None
- **Pin 8**: BI_DB- (green)
- **Pin 9**: None
- **Pin 10**: Pri_Power_Return (0 VDC)

Sonar Head - SubConn MCOM6F: Power and Ethernet

The Sonar Head cables are intended for underwater use and include both power and Ethernet telemetry connections for the Sonar Head. The SubConn® underwater connectors are a wet-mate style and can be mated or unmated at the surface or underwater.

Pin Functions

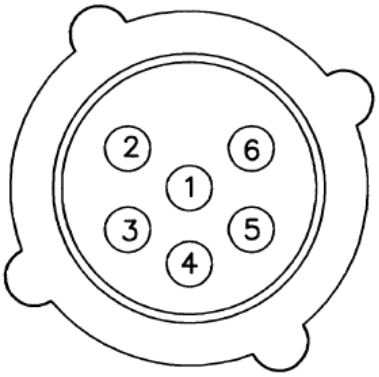

- **Pin 1**: BI_DA+ (white)
- **Pin 2**: BI_DA- (orange)
- **Pin 3**: BI_DB+ (white)
- **Pin 4**: BI_DB- (green)
- **Pin 5**: V+ (white)
- **Pin 6**: V- (black)

Sonar Head - SubConn DIL13F: Power and Ethernet

The Sonar Head cables are intended for underwater use and include both power and Ethernet telemetry connections for the Sonar Head. The SubConn® underwater connectors are a wet-mate style and can be mated or unmated at the surface or underwater.

Pin Functions

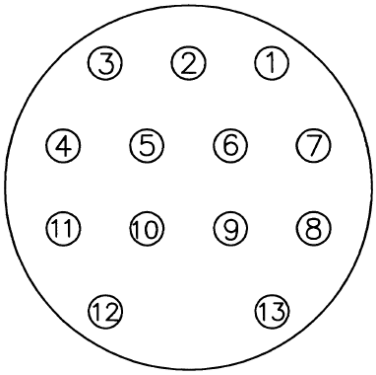

- **Pin 1**: V- (black)
- **Pin 2**: BI_DA+ (orange)
- **Pin 3**: V+ (white)
- **Pin 4**: BI_DD- (brown)
- **Pin 5**: BI_DD+ (brown/white)
- **Pin 6**: BI_DC+ (blue)
- **Pin 7**: BI_DC- (blue/white)
- **Pin 8**: BI_DA- (orange)
- **Pin 9**: BI_DA+ (orange/white)
- **Pin 10**: BI_DB- (green)
- **Pin 11**: BI_DB+ (green/white)
- **Pin 12**: V+ (red)
- **Pin 13**: V- (green)

Sonar Head - SubConn MCIL8F: Power and Ethernet

The Sonar Head cables are intended for underwater use and include both power and Ethernet telemetry connections for the Sonar Head. The SubConn® underwater connectors are a wet-mate style and can be mated or unmated at the surface or underwater.

Pin Functions

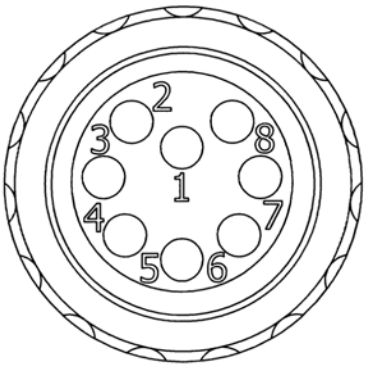

- **Pin 1**: VIN- (black and green)
- **Pin 2**: VIN+ (red and white)
- **Pin 3**: SYNC / VDSL+ (brown/white)
- **Pin 4**: SYNC_GND / VDSL- (white)
- **Pin 5**: BI_DA+ (orange/white) / TX+
- **Pin 6**: BI_DA- (white) / TX-
- **Pin 7**: BI_DB+ (green/white) / RX +
- **Pin 8**: BI_DB- (white) / RX-

Note

The M3 Sonar supports auto MDI/MDI-X.

Basic cable requirements

It is very important that all systems cables are installed correctly. All cables must be properly supported and protected, and all relevant precautions must be made to prevent unwanted noise.

Topics

Ethernet cable installation, page 124

Radio frequency interference, page 125

Physical protection of cables, page 125

Grounding of system cables, page 126

Cable connections and terminations, page 126

Ethernet cable installation

All cable connections may have to be made in accordance with the guidelines laid down by the local electrical code.

Alien crosstalk

Alien crosstalk is where the signal from one cable interferes with the signal being carried by another. This type of crosstalk resembles noise and reduces the quality of the communication link. Alien crosstalk can occur when multiple Ethernet cables are coiled on a spool, looped, or bundled together running long distances. Unlike other crosstalk that takes place within the cable, alien crosstalk cannot be eliminated using phase cancellation. Alien crosstalk is more of a problem at high data rates such as 1000BaseT or higher.

Here are some suggestions for avoiding alien crosstalk.

- Avoid tightly bundling cables together in parallel over long distances.
- Avoid using tie wraps to bundle cables together. Try to separate cables as much as possible. If tie wraps are used, do not overtighten. Velcro cable wraps are recommended instead of tie wraps and can easily be reused if rearranging the cables.
- Use Category 6A cable. This type of cable has a special core wrap that isolates and protects the core from alien crosstalk.

Cable termination

Depending on your deployment method, you may need to terminate your Ethernet cables. Terminating Ethernet cables is very precise work. To avoid impacting telemetry quality, take note of the following problem areas.

- The parallel location of wires in the RJ45 connector forms a capacitive plate that is a source for signal coupling or crosstalk.
- Untwisting the cable pairs increases the cable's susceptibility to crosstalk interference.
- The cable crimping process can crush the conductor pairs and cause crosstalk interference.

Here are some suggestions to ensure optimal telemetry quality when terminating Ethernet cables.

- Use CAT5E- or CAT6-rated underwater connectors.
- Use CAT5E- or CAT6-rated patch cords that have been factory tested.
- Use CAT5E- or CAT6-rated patch panels, connectors and sockets.
- Do not untwist the cable more than 0.5 inches for CAT5E cables and not more than 0.375 inches for CAT6 cables.
- Remove as little cable jacket as possible.

Ground loops

Ground loop noise is caused when the equipment is grounded at two or more points that have different potentials. This inconsistency creates a current path causing electromagnetic interference (EMI). This interference appears as rings in the sonar view (usually at a constant range). The thickness and intensity of the rings will depend on the EMI generated by the ground loop.

Bend radius

Always observe the specified cable bend radius. Disturbing the cable geometry can introduce crosstalk interference. The bend radius is usually ten times the cable diameter.

Radio frequency interference

All cables that are to be permanently installed within 9 m (30 ft) of any source of Radio Frequency (RF) interference such as a transmitter aerial system or radio transmitters, must, unless shielded by a metal deck or bulkhead, be adequately screened

Suitable screening can be established using sheathing, braiding or other suitable material. In such a situation flexible cables should be screened wherever possible.

It is important that cables, other than those supplying services to the equipment installed in a radio room, are not installed through a radio room, high power switch gear or other potential sources of interference. Cables which must pass through a radio room must be screened by a continuous metal conduit which must be bonded to the screening of the radio room at its points of entry and exit.

Physical protection of cables

Cables exposed to the risk of physical damage must be enclosed in a steel conduit or protected by a metal casing unless the cable's covering (for example armour or sheath) is sufficient to protect it from the damage risk.

Cables exposed to an exceptional risk of mechanical damage (for example in holds, storage-spaces and cargo-spaces) must be protected by a suitable casing or conduit, even when armoured, if the cable covering does not guarantee sufficient protection for the cables.

Metallic materials used for the physical protection of cables must be suitably protected against corrosion.

Grounding of system cables

All metallic cable coverings (armour, metallic sheathing and other protection) must be electrically connected to the vessel's hull at both ends except in the case of final sub-circuits where they should be connected at the supply end only.

Grounding connections should be made using a conductor which has a cross-sectional area appropriate for the current rating of the cable, or with a metal clamp which grips the metallic covering of the cable and is bonded to the hull of the vessel. These cable coverings may also be grounded by means of glands specially intended for this purpose and designed to ensure a good ground connection. The glands used must be firmly attached to, and in good electrical contact with, a metal structure grounded in accordance with these recommendations.

Electrical continuity must be ensured along the entire length of all cable coverings, particularly at joints and splices. In no case should the shielding of cables be used as the only means of grounding cables or units.

Metallic casings, pipes and conduits must be grounded, and when fitted with joints these must be mechanically and electrically grounded locally.

Cable connections and terminations

All cable connections are shown on the applicable cable plan and/or interconnection diagrams.

Where the cable plan shows cable connections outside an equipment box outline, the connections are to be made to a plug or socket which matches the plug or socket on that particular item of equipment.

Where two cables are connected in series via a junction box or terminal block, the screens of both cables must be connected together, but not grounded.

Care must be taken to ensure that the correct terminations are used for all cable conductors, especially those that are to be connected to terminal blocks. In this case, crimped sleeve-terminations must be fitted to prevent the conductor core from fraying and making a bad connection with the terminal block. It is also of the utmost importance that where crimped terminations are used, the correct size of crimp and crimping tool are used. In addition, each cable conductor must have a minimum of 15 cm slack (service loop) left before its termination is fitted.

Drawing file

Topics

About the drawings in the drawing file, page 127

500 m Sonar Head outline dimensions, page 128

4000 m Sonar Head outline dimensions, page 131

Sonar Head with integrated sound speed sensor outline dimensions, page 134

About the drawings in the drawing file

Relevant drawings related to the installation and/or maintenance of the M3 Sonar are provided for information purposes only.

The drawings are not to scale. Unless otherwise specified, all measurements are in inches. The original installation drawings are available by request in PDF and/or SolidWorks format.

500 m Sonar Head outline dimensions

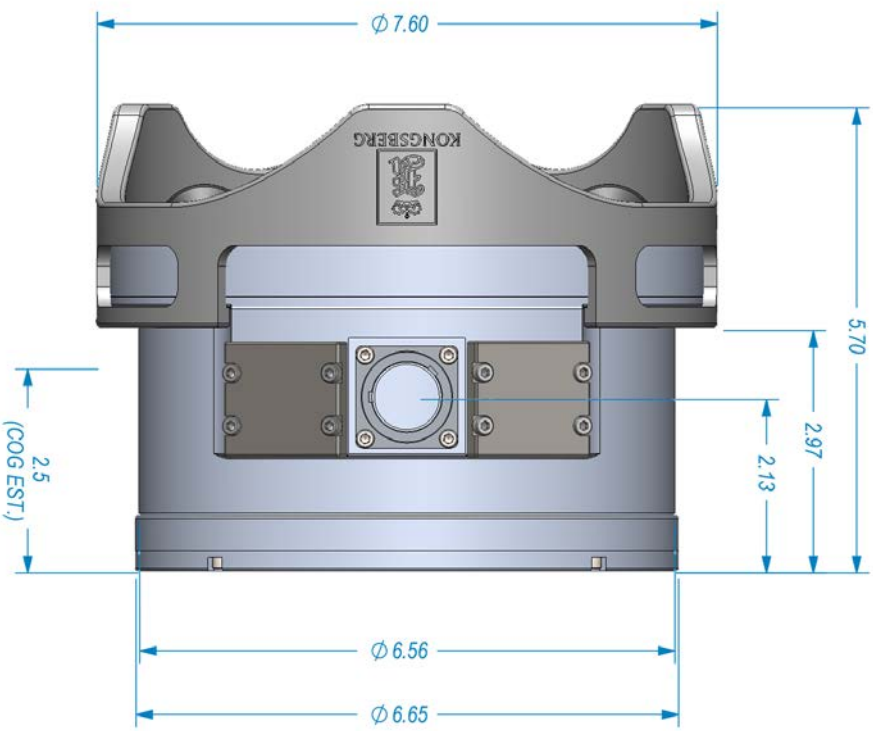

All measurements in inches.
Drawing is not to scale.

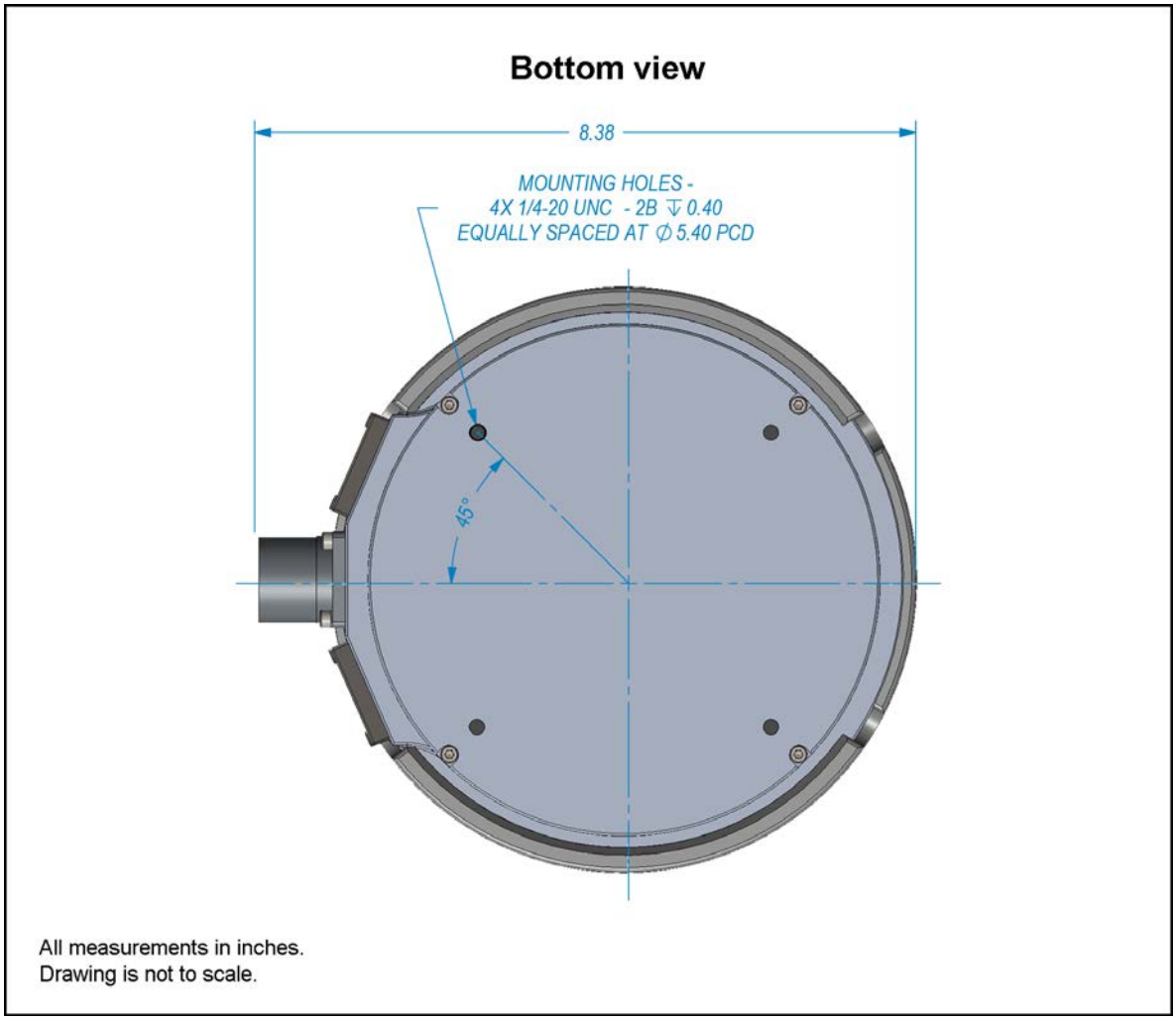
Bottom view
8.38
MOUNTING HOLES -
4X 1/4-20 UNC - 2B ↧ 0.40
EQUALLY SPACED AT ⌀ 5.40 PCD
45°
All measurements in inches.
Drawing is not to scale.

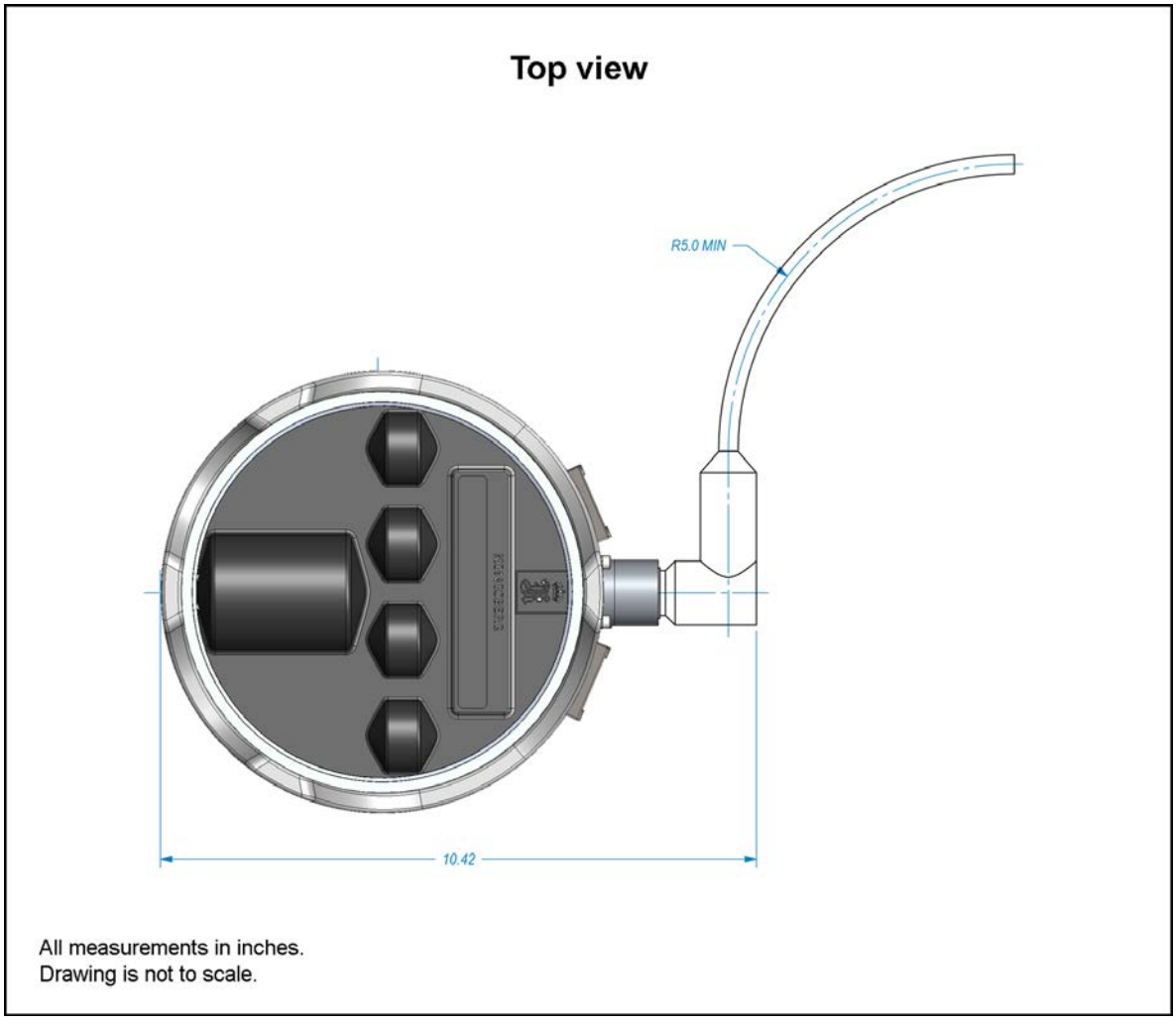
Top view
R5.0 MIN
10.42
All measurements in inches.
Drawing is not to scale.

4000 m Sonar Head outline dimensions

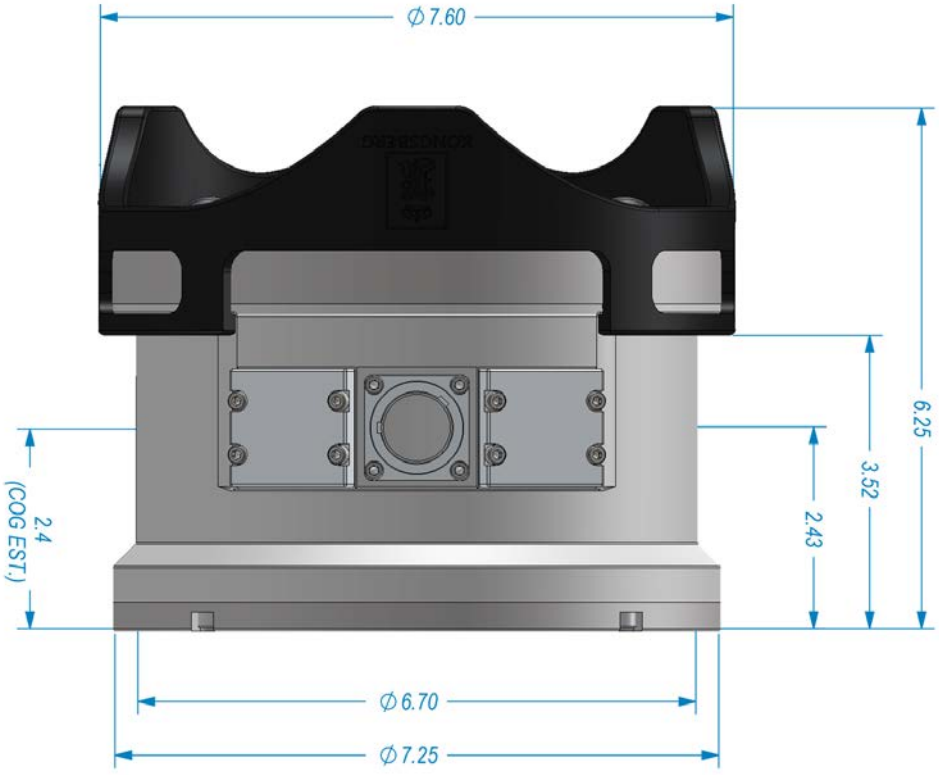

All measurements in inches.
Drawing is not to scale.

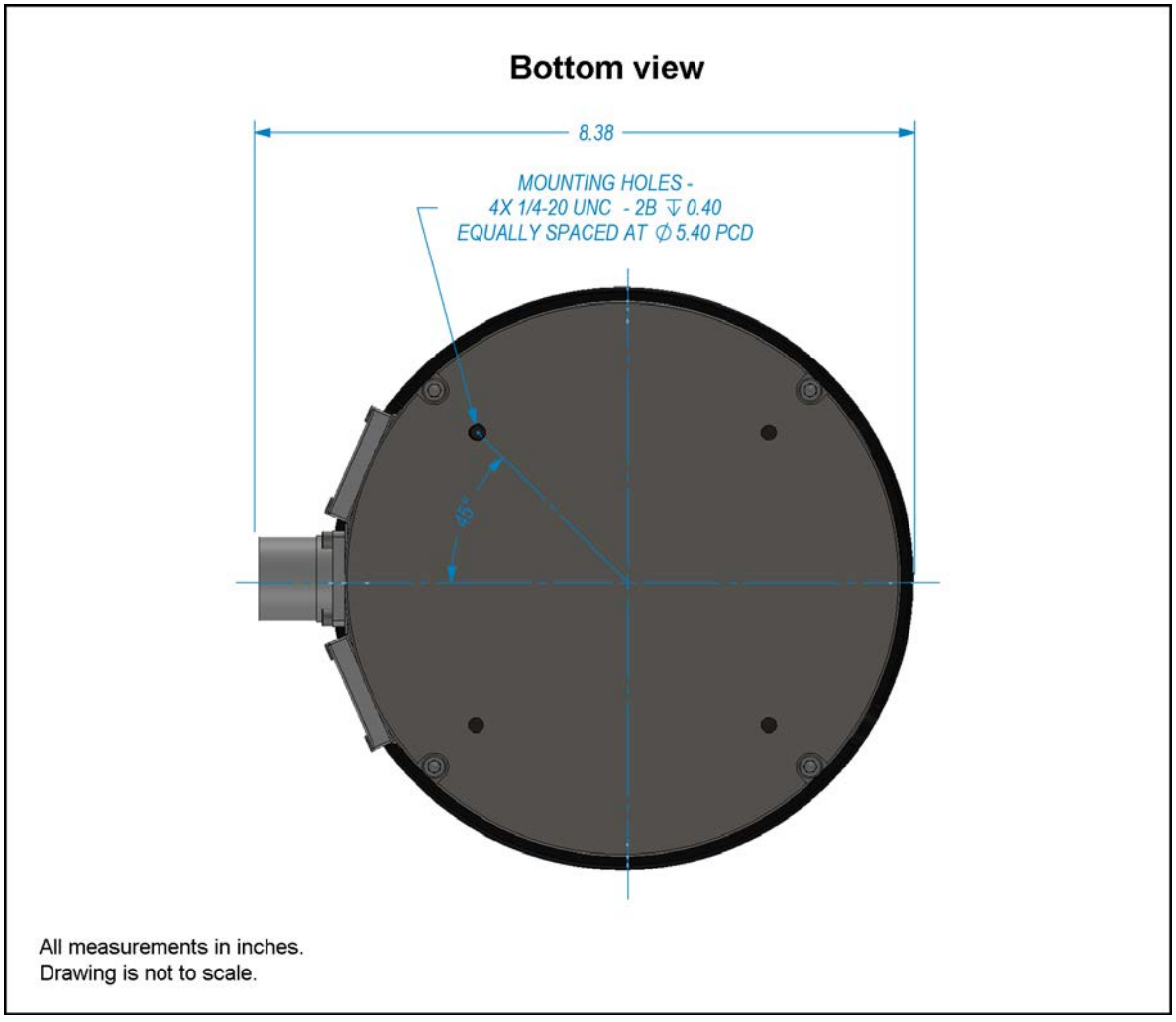
Bottom view
8.38
MOUNTING HOLES -
4X 1/4-20 UNC - 2B ↧ 0.40
EQUALLY SPACED AT ⌀ 5.40 PCD
45°
All measurements in inches.
Drawing is not to scale.

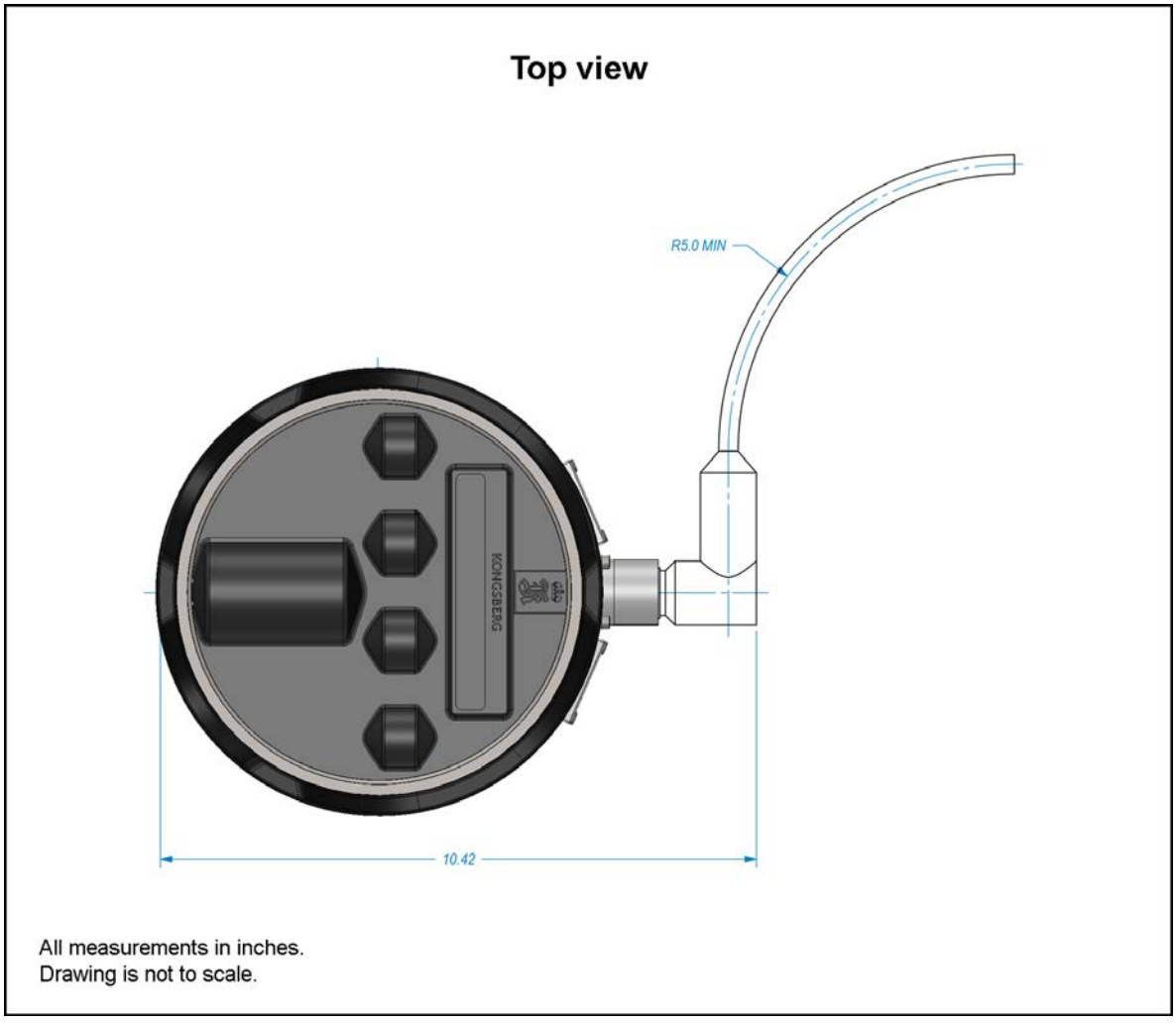
Top view
R5.0 MIN
KONGSBERG
10.42
All measurements in inches.
Drawing is not to scale.

Sonar Head with integrated sound speed sensor outline dimensions

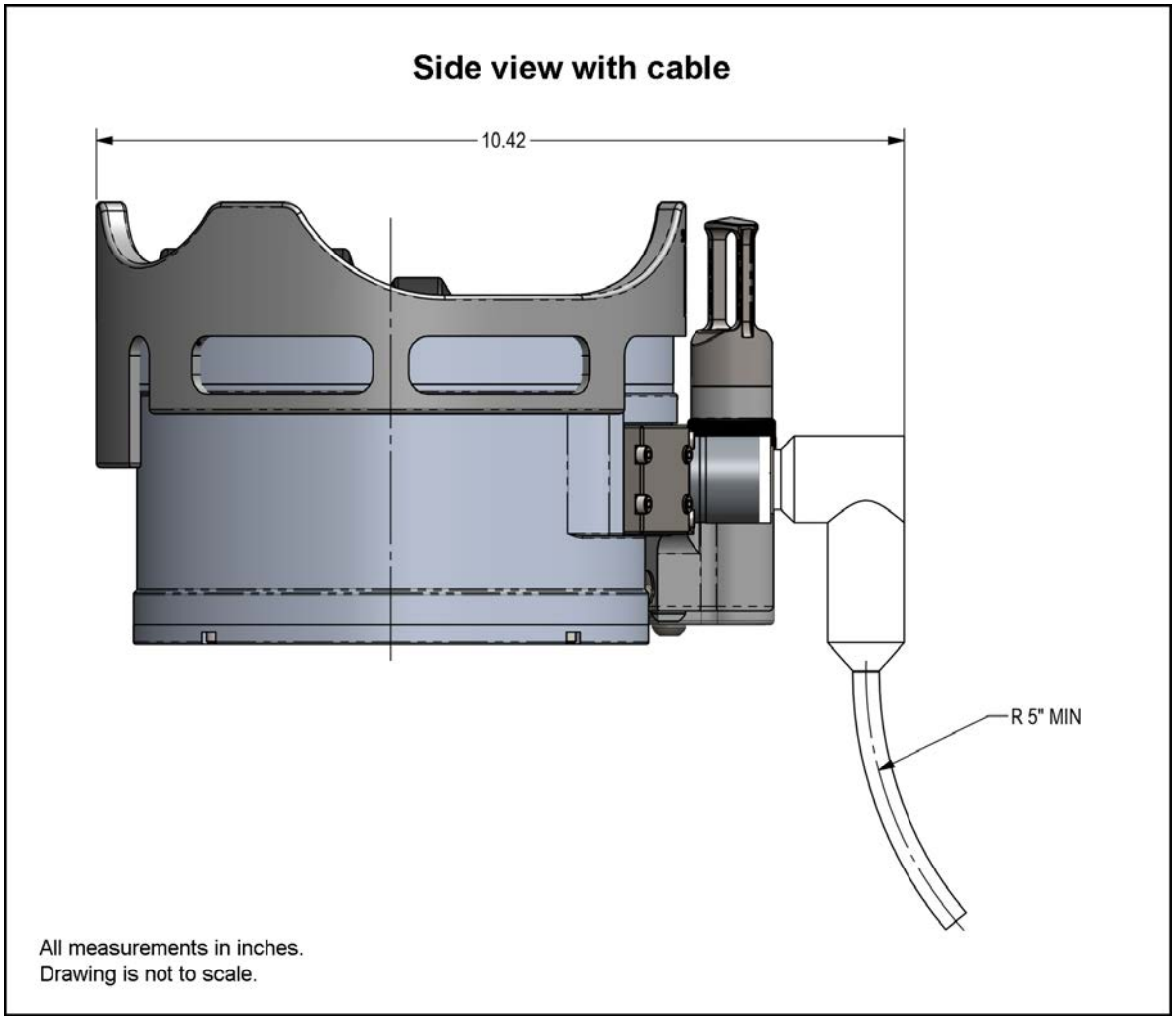

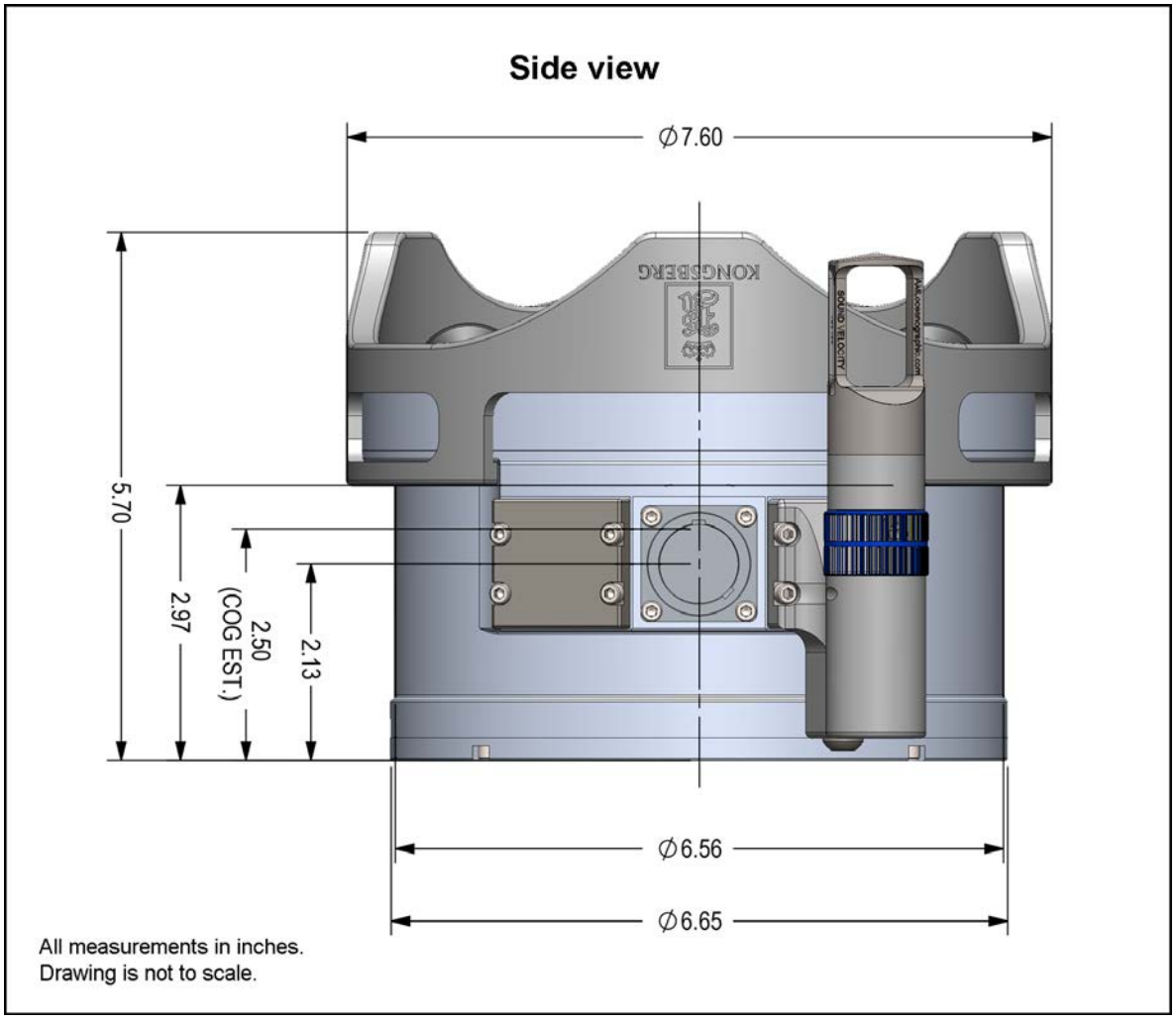
Side view
Ø7.60
KONGSBERG
5.70
2.97
2.50
(COG EST.)
2.13
Ø6.56
Ø6.65
All measurements in inches.
Drawing is not to scale.

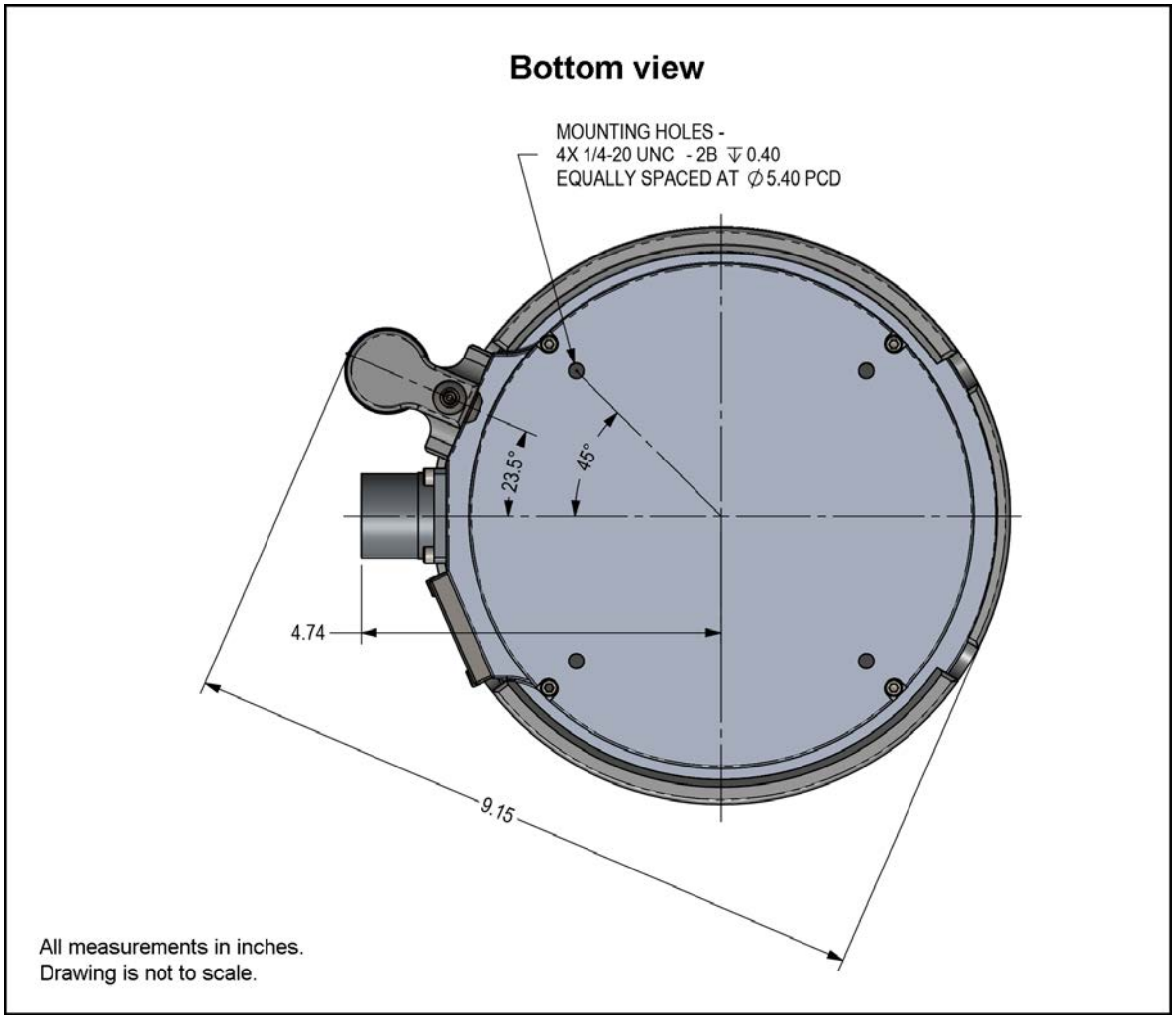
Bottom view
MOUNTING HOLES -
4X 1/4-20 UNC - 2B ↧0.40
EQUALLY SPACED AT ⌀5.40 PCD
23.5°
45°
4.74
9.15
All measurements in inches.
Drawing is not to scale.

Technical specifications

Topics

Introduction to technical specifications, page 138

Interface specifications, page 139

Performance specifications, page 142

Mechanical specifications, page 144

Power requirements, page 146

Environmental requirements, page 147

Minimum computer requirements, page 148

Introduction to technical specifications

These technical specifications summarize the main functional and operational characteristics of the M3 Sonar Multibeam sonar. They also provide information related to power requirements, physical properties and environmental conditions.

Note

At Kongsberg Mesotech, we are continuously working to improve the quality and performance of our products. The technical specifications may be changed without prior notice.

Interface specifications

The M3 Sonar Multibeam sonar will interface with peripheral systems and sensors using standard and/or proprietary datagram formats.

Supported datagram formats for position information

The M3 Sonar supports the following datagram formats for position information.

- **NMEA GGA**

  The NMEA GGA datagram transfers time-, position- and fix-related data from a global positioning system (GPS).

- **NMEA GLL**

  The NMEA GLL datagram transfers the latitude and longitude of vessel position, the time of the position fix and the current status from a global positioning system (GPS).

- **GGK**

  This third party datagram format contains the vessel's current position with the assigned coordinated universal time (UTC) of position, as well as a selection of position quality factors.

Supported datagram formats for speed information

The M3 Sonar supports the following datagram format for speed information.

- **NMEA VTG**

  The NMEA VTG datagram contains the actual course and speed relative to the ground.

Supported datagram formats for heading information

The M3 Sonar supports the following datagram formats for vessel heading and/or gyro information.

- **NMEA HDG**

  The NMEA HDG datagram provides heading from a magnetic sensor. If this reading is corrected for deviation, it produces the magnetic heading. If it is offset by variation, it provides the true heading.

- **NMEA HDM**

  The NMEA HDM datagram provides vessel heading in degrees magnetic. The datagram format is no longer recommended for use in new designs. It is often replaced by the NMEA HDG telegram.

- **NMEA HDT**

  The NMEA HDT datagram provides the true vessel heading. The information is normally provided by a course gyro.

- **Kongsberg EM Attitude 3000**

  The EM Attitude 3000 is a proprietary datagram format created by Kongsberg for use with digital motion sensors. It holds roll, pitch, heave and heading information. The datagram contains a 10-byte message.

- **Octans STD1**

  This is a third-party proprietary datagram format for heading, speed, and motion. It was created by iXSea (http://www.ixblue.com) for use with their Octans gyrocompass.

Supported datagram formats for motion information

The M3 Sonar supports the following datagram formats from a motion sensor.

- **Teledyne TSS1**

  Teledyne/TSS1 is a proprietary datagram format for heave, roll and pitch compensation. When you select this protocol, the number of sensor variables is fixed, and there is no token associated with it.

- **Kongsberg EM Attitude 3000**

  The EM Attitude 3000 is a proprietary datagram format created by Kongsberg for use with digital motion sensors. It holds roll, pitch, heave and heading information. The datagram contains a 10-byte message.

- **Octans STD1**

  This is a third-party proprietary datagram format for heading, speed, and motion. It was created by iXSea (http://www.ixblue.com) for use with their Octans gyrocompass.

Supported datagram formats for sound speed sensors

The M3 Sonar supports the following datagram format from a sound speed sensor.

- **Valeport**

  This is a third-party proprietary datagram format created by Valeport Ltd. for use with their sound velocity sensors. The file format is ASCII. There are three formats: standard format (millimetres per second), alternative format #2 (metres per second with two decimal places), and alternative format #3 (metres per second with three decimal places). For more information, see http://www.valeport.co.uk.

Note

If you are using a Sonar Head with an integrated AML sound speed sensor, you do not need to interface with a datagram as it is built into the sonar.

Supported datagram formats for depth information

The M3 Sonar supports the following datagram formats for depth output.

- **NMEA DBT**

  The NMEA DBT datagram provides the current depth under the transducer. In new designs, this datagram is frequently used to replace the DBK and DBS datagrams.

- **NMEA DPT**

  The NMEA DPT datagram provides the water depth relative to the transducer, and the offset of the measuring transducer.

Processed data formats

The following processed data output formats are available.

- **.mmb**

  This is raw element data, not beamformed, in a 16-bit fixed-point complex format. This format allows great flexibility in how the data is processed and allows you to do your own beamforming or profile-point extraction. The data body size is determined by the number of elements and the number of samples.

- **.imb**

  This format consists of beamformed data in a 32-bit floating point complex format. Data body size is determined by the number of beams and samples. Different modes may form a different number of beams. Therefore, data body size may change depending upon the mode.

- **.ALL**

  This is the proprietary Kongsberg EM series datagram format. The M3 software can output this data format to be compatible with third-party post-processing software.

Synchronization

- **PRI Sync**

  PRI Sync (set with *Trigger Mode* on the **Sonar Setup** page of the **System Configuration** dialog box) provides ping synchronization with another Sonar Head or other acoustic source that supports synchronization (for example, EK60, Sidescan, DVL, etc.). PRI Sync is a level-sensitive method of synchronization. When the sync is held high, the sonar will not transmit. The PRI Sync INPUT must be held low for 25µs in order to trigger the Sonar Head. The Sonar Head will transmit a 100µs sync OUTPUT pulse when configured as **Master** on the **Sonar Setup** page. The sync OUTPUT is generated each time the Sonar Head transmits.

- **Host Time Sync Mode**

  Host mode synchronizes the Sonar Head time with the computer time. This mode is critical for Bathymetry applications. *Host* mode only works if the computer is connected to an accurate time source, such as a GPS or network time server. When connecting to the Sonar Head, it takes two minutes to synchronize the time to within five milliseconds.

- **1PPS Time Sync Mode**

  1PPS is a 0 to 5 VDC pulse, with a 50% duty cycle. The Sonar Head time can be synchronized to external 1PPS pulses.

  The time is synchronized to the rising edge of the 1PPS pulses. When the rising edge of a 1PPS pulse is detected then the ns, us and ms counters are set to zero. The second counter is set to zero if the ms counter is < 500 and increased by 1 if the ms counter is >= 500.

  1PPS synchronization requires ZDA input over UDP to the Sonar Head (not to the M3 software) on UDP port 31100 at 1Hz.

  The 1PPS signal must be sent to the Sonar Head using the 1PPS input on one of the following cables.

  – 10-pin SEA CON® MINK-10-CCPL cable used with M3 Sonar model 922-20220000.

  – 4-pin SEA CON® MIND-4-FCR cable used with M3 Sonar model 922-20050000.

  The Sonar Head must be upgraded to the latest firmware version (version 1.5 or later). The firmware upgrade procedure can be found in the *M3 Sonar Reference Manual*.

- **Computer Time Sync**

  If ZDA is configured, the M3 software will use the time in the ZDA message to synchronize the computer clock automatically in the background. However, you may need to run the M3 software as an administrator (right-click on the icon and select **Run as administrator**) or Windows may not allow the software to change the system clock. Computer time sync can be useful when data is being logged on more than one computer and synchronized timing is required. This method is not recommended for Bathymetry applications as it is not accurate enough.

  Note

  Computer time sync requires both GGA and ZDA input.

Performance specifications

These performance specifications summarize the main functional and operational characteristics of the M3 Sonar system.

- **Slant range**: 0.2 to 150 m

- **Depth**: 0.2 to 75 m
- **Coverage**: 3.5 x Depth / 120°
- **Range resolution**: 1 cm
- **Frequency**: 500 kHz
- **Pulse types**: CW, LFM
- **Modes**: Variable Vertical Beamwidth, EIQ
- **Communication**: Ethernet
- **Data Rates**: 10/100/1000 Mbps

Synchronization

- **PRI Synchronization (master / slave operation):**
  - **Sync Input**: 0 to 5 VDC, hold-off when high
  - **Sync Output**: 0 to 5VDC active low pulse 100µs
- **1PPS Synchronization**

Variable Vertical Beamwidth (Imaging) mode

- **Horizontal Field of View**: 120°
- **Vertical Field of View**: 3°, 7°, 15°, 30°
- **Angular Resolution**: 1.6°
- **Update rate**: up to 40 Hz

EIQ mode

- **Horizontal Field of View**: 140°
- **Vertical Field of View**: 30°
- **Angular Resolution**: 0.95°
- **Update rate**: up to 10 Hz

Bathymetry/Profiling mode

- **Across track field of view**: 120°
- **Along track field of view**: 3°
- **Number of beams**: up to 256
- **Update rate**: up to 40 Hz
- **Beam spacing**: Equiangular

VDSL

Firmware version: 1.5

Part number: 320-27701000-0150 (Rx controller)

Important

Although VDSL sonar heads are pre-programmed at the factory with the correct firmware, you may need to upgrade your firmware if you do not have the latest version for your VDSL Sonar Head. For the best performance, firmware version 1.5 (or later) is required for applications using a long cable and VDSL telemetry. Note that you only need to upgrade the Sonar Head receive firmware file (.RXF) and the Sonar Head software file (.ASW). You do not need to upgrade the Sonar Head transmit firmware file (.TXF).

AML SVT Xchange sound speed sensor

A Sonar Head with an integrated AML sound speed sensor is available from Kongsberg Mesotech.

- **Range**: 1375 - 1625 m/s
- **Resolution**: 0.001 m/s
- **Accuracy**: 0.025 m/s
- **Response time**: 20 ms
- **Precision**: 0.006 m/s

Mechanical specifications

These mechanical specifications summarize the physical properties of the M3 Sonar system.

Note

For more detailed information about the physical dimensions, see the Drawing file.

Sonar Processor

The Sonar Processor uses a high-quality commercial-off-the-shelf laptop computer workstation. The weight and dimensions of the model may vary. Contact your Kongsberg Mesotech representative for information about the current model that is delivered with your M3 Sonar system.

500 m Sonar Head

- **Depth rating**: 500 m

- **Dimensions**
  - **Diameter**: 185 mm (7.28”)
  - **Depth**: 126 mm (4.95”)
- **Weight**: 4.4 kg (air), 1.8 kg (water)
- **Materials**: Anodized Aluminium, Stainless Steel 316, Elastomeric Polyurethane
- **Connector type**: SEA CON®
- **Connector model**: MINK-10-FCRL (Telemetry & Power)

4000 m Sonar Head

- **Depth rating**: 4000m
- **Dimensions**
  - **Diameter**: 185 mm (7.28”)
  - **Depth**: 140 mm (5.50”)
- **Weight**: 8.2 kg (air), 5.1 kg (water)
- **Materials**: Titanium, Stainless Steel 316, Elastomeric Polyurethane
- **Connector type**: SEA CON®
- **Connector model**: MINK-10-FCRL (Telemetry & Power)

Optional connector models

- **Synchronization**: SEA CON®, MIND-4-FCR
- **100BaseTX Ethernet and Power**: Alstom Seanet (4000 m M3 Sonar only)
- **100BaseTX Ethernet and Power**: SubConn MCBHRA6MSS (500 m M3 Sonar only)

VDSL

Cable requirements: One twisted pair (100-ohm impedance)

Note

VDSL will work over two wires. Actual data rate will vary with the cable quality.

- **3 m (10 foot) cable**: Up to 100 Mbps
- **152 m (500 foot) cable**: Up to 100 Mbps
- **1000 m (3300 foot) cable**: 27 Mbps (measured on Belkin 1353A)

AML SVT Xchange sound speed sensor

A Sonar Head with an integrated AML sound speed sensor is available from Kongsberg Mesotech.

- **Depth rating**: 11000 m
- **Weight**: 120 g
- **Material**: Titanium

Power requirements

These power characteristics summarize the supply power requirements for the M3 Sonar system.

Sonar Processor

- **Power adapter input voltage**: 120/240 VAC
- **Laptop input voltage**: 19.5 VDC @ 180W (max)

Sonar Head

- **Input voltage**: 12 to 36 VDC
- **Input power**: 22W (avg.), peak power < 60W, mode dependant
- **Maximum cable loop resistance for Sonar Head power**:
  - 0.1 Ω @ 12VDC
  - 2 Ω @ 24VDC
  - 6 Ω @ 36VDC

  Note

  These values were measured at +23°C.

Environmental requirements

These specifications summarize the temperature requirements and other environmental standards for the M3 Sonar system.

Sonar Processor

The Sonar Processor uses a high-quality commercial-off-the-shelf laptop computer workstation. This computer is intended to be installed inside in an area suitable for extended human habitation. Contact your Kongsberg Mesotech representative for information about the current model that is delivered with your M3 Sonar system.

Sonar Head

- **Temperature**: -2° to + 38 °C (operation), -40 to +55 °C (storage)
- **Shock qualified**: +/-50gs, 3 Axes, 6 shocks per axis
- **Vibration qualified**: 4g, 30Hz 3 Axes, 2 hours per axis. No resonance below 800Hz

The stated operation temperature range is for the Sonar Head in water. The Sonar Head can be powered on and started at temperatures between -20° to +45° C. There is a built-in temperature monitor that will display a software warning message and automatically power down the Sonar Head before it overheats.

Caution

The Sonar Head must not be exposed to direct sunlight for prolonged periods of time. Prolonged exposure to ultra-violet rays and excessive heat may damage the surface of the polyurethane transducer face. Store the Sonar Head in a cool, dry location away from ozone sources (such as electric motors or welders).

AML SVT Xchange sound speed sensor

A Sonar Head with an integrated AML sound speed sensor is available from Kongsberg Mesotech.

- **Storage temperature**: -20 to 60 °C
- **Operating temperature**: -5 to 45 °C

Minimum computer requirements

Although a computer can be ordered from Kongsberg Mesotech as a part of the M3 Sonar delivery, it is also possible to purchase one locally.

If you purchase a computer locally, make sure that the chosen model meets the functional and technical requirements.

It is important to make sure that the chosen computer model is relatively new with sufficient processing power, a high performance graphic adapter, and a high speed network adapter.

We recommend a computer with a CPU that has a PassMark Software benchmark score of 6000 or more (passmark.com).

PassMark Software is a Windows computer performance benchmarking utility. Computers with a CPU score of 6000 or higher have been tested with the M3 Sonar. Lower-scoring computers may not perform well, resulting in a slow GUI response, slower ping rates, or dropped pings.

When running two M3 Sonars, an average CPU Mark of 8000 is recommended.

The computer must be able to facilitate the various interface requirements made by the M3 Sonar, and you may need to add extra Ethernet and serial adapters.

Note

The computer design and construction must allow for maritime use, easy access to connectors, parts and cables, and a safe installation.

The minimum technical requirements are:

- **Processor**: 2.80 GHz, Intel quad core i7
- **Memory**: minimum 8 GB
- **Hard disk**: minimum 500 GB
- **Graphics card RAM**: 256 MB
- **Network interface**: 100/1000 Mbps
- **Serial interfaces**: One or more serial line interfaces are required. The number of serial lines depends on the interface requirements.
- **Operating system**: The M3 software has been designed for the Microsoft® 64-bit Windows 10 operating system. Windows 7 is supported for imaging applications only. Profiling applications will not work properly in Windows 7. Operating systems older than Windows 7 are not supported.

Equipment handling

Topics

Transporting Kongsberg Mesotech equipment, page 150

Lifting units and transportation boxes, page 151

Inspection of units and transportation boxes after arrival, page 152

Specifications for storage prior to installation or use, page 153

Unpacking standard parts and units, page 154

Repacking the Sonar Head, page 156

Transporting Kongsberg Mesotech equipment

Unless otherwise stated in the accompanying documentation, electronic, electromechanical and mechanical units supplied by Kongsberg Mesotech can be only transported using methods approved for delicate and fragile equipment.

Prerequisites

Transportation methods approved for delicate equipment includes transportation by road, rail, air or sea.

Context

The units are to be transported in accordance with general or specific instructions for the appropriate unit(s), using pallets, transport cases, wooden boxes, or carton boxes as appropriate.

Observe the packing instructions.

Note

Special local restrictions concerning air transportation may be applied to units containing certain types of batteries. These units must be checked properly, and the regulations must be investigated by the packer/shipper before the unit is dispatched.

Procedure

1 Ensure that all local transportation is done according to the same specifications as for the initial delivery.

2 Make sure that the box containing the unit is kept dry at all times, and sheltered from the weather.

It must not be subjected to shocks, excessive vibration or other rough handling. The box will normally be marked with text or symbols indicating which way it is to be placed. Follow the instructions provided, and make sure that the box is always placed with its “top” facing upwards.

3 Make sure that the box is not used for any purpose for which it was not intended (step, table, etc.).

In the absence of other information, no other boxes must be stacked on top of it.

4 Handle all boxes and units with care.

Note

Due to the nature of Kongsberg Mesotech's products, and the extensive use of delicate electronic parts, all units and boxes must be regarded and handled as fragile equipment.

Lifting units and transportation boxes

Some of the boxes used to hold equipment units may be heavy. Use caution when lifting.

Prerequisites

Units and boxes may be heavy. Make sure that you have the necessary equipment required for lifting heavy items. Persons using the lifting equipment must be skilled and have the relevant certificate(s).

Context

A heavy box will normally be marked with its weight. The weights of other boxes in the shipment will normally be entered on the packing list(s).

Heavy units may be equipped with dedicated lifting lugs for transportation by crane within the workshop or installation area.

Note

Observe the local rules and regulations related to the use of lifting equipment.

Procedure

1 Check the weight of the box or unit before you attempt to lift it.

2 Make sure that you have the relevant lifting apparatus required, and that this equipment is approved and certified for the load.

3 If you need to use a crane:

   a Check the applicable weight certificate for the crane.

   b Check the security of the lifting lugs.

   c If the unit to be lifted is provided with dedicated lifting lugs, make sure that all available lugs are used.

   d Make sure that the unit remains under full control during the lifting operation.

   This is important to avoid damage to the unit, equipment or personnel.

4 If you need to use a forklift truck:

a Check the applicable weight certificate for the truck.

b Check the limitations for lifting height and angles.

c Pay special attention to the position of the unit's centre of gravity.

d Make sure that the unit is properly secured to the truck during the lifting and transportation operations.

5 Handle all units and boxes with care.

Note

Due to the nature of Kongsberg Mesotech's products, and the extensive use of delicate electronic parts, all units and boxes must be regarded and handled as fragile equipment.

Inspection of units and transportation boxes after arrival

A visual inspection must be done immediately after the box(es) have arrived at their destination.

Prerequisites

If you suspect that the equipment has been damaged during the transport, request that a representative of the carrier is present during the inspection.

Procedure

1 Check all boxes (wooden or cardboard boxes, plastic bags and/or pallets) for physical damage.

Look for signs of dropping, immersion in water or other mishandling.

2 If external damage is detected, open the box to check its contents.

Request that a representative of the carrier to be present while the box is opened, so any transportation damage can be identified and documented.

3 If a unit has been damaged, prepare an inspection report stating the condition of the unit and actions taken.

Describe the damage, and collect photographic evidence if possible. Return the inspection report to Kongsberg Mesotech as soon as possible.

4 If units are not damaged, check the humidity absorbing material.

If required, dry or replace the bags, then re-pack the unit(s) according to the packing instructions.

Specifications for storage prior to installation or use

When a system, a unit or a spare part has been delivered to the customer, it may be subject to long time storage prior to installation and use.

General specifications

During this storage period, certain specifications must be met. The equipment must be preserved and stored in such a way that it does not constitute any danger to health, environment or personal injury.

1 The equipment must be stored in its original transportation box.

2 Ensure that the units are clearly separated in the shelves and that each unit is easily identifiable.

3 The box must not be used for any purpose for which it was not intended (work platform, steps, table etc.).

4 Boxes must not be placed on top of each other, unless specific markings permit this.

5 Boxes must not be placed directly on a dirt floor.

6 Do not open a box for inspection unless special circumstances permit so.

"Special circumstances" may be suspected damage to the box and its content, or inspections by civil authorities.

a If a unit is damaged, prepare an inspection report stating the condition of the unit and the actions taken. Describe the damage and collect photographic evidence if possible. Re-preserve the equipment.

b If the unit is not damaged, check the humidity absorbing material. If required, dry or replace the bags, then re-pack the unit according to the packing instructions.

7 If a box has been opened, make sure that is it closed and sealed after the inspection. Use the original packing material as far as possible.

8 The storage room/area must be dry with a non-condensing atmosphere. It must be free from corrosive agents.

9 The storage room/area's mean temperature must not be lower than -10° C, and not warmer than +50° C. If other limitations apply, the crates will be marked accordingly.

10 Boxes must not be exposed to moisture from fluid leakages.

11 Boxes must not be exposed to direct sunlight or excessive warmth from heaters.

12 Boxes must not be subjected to excessive shock and vibration.

13 If the unit contained in a box holds normal batteries, these may have been disconnected/isolated before the unit was packed. These must only be reconnected before the installation starts. Units containing batteries are marked.

Caution

Units containing lithium or alkaline batteries must be handled separately and with care. Such units are marked accordingly. Do not attempt to recharge such batteries, open them, or dispose of them by incineration.

Refer to the applicable product data sheets or battery handling procedures for further details.

Temperature protection

Any units that requires protection against extreme temperatures are identified as such in the applicable documentation. The box used to transport and store such units are clearly marked, for example:

Must not be transported or stored in temperatures below -5 °C.

Other temperature limits may be used if applicable.

If a unit needs temperature protection, the box to be used for storage and transportation must be lined on all walls, base and lid, using minimum 5 cm thick polyurethane or polystyrene foam.

Most system units can normally be stored in temperatures between -30° C and +70° C. Refer to the relevant technical specifications for details.

Note

Unless otherwise specified, transducers and hydrophones must not be stored in temperatures below −10°C and above +50°C.

Unpacking standard parts and units

Prior to installation or use, parts and units must be inspected, and then unpacked from their transport boxes. It is important that this unpacking is done without inflicting damage to the equipment.

Context

This procedure provides the basic tasks of unpacking units (main unit, spare parts etc) from boxes shipped from Kongsberg Mesotech.

Note

If the unit in question is not unpacked for immediate use, you may consider storing it unopened in its original box. However, it may be useful to open the box to check its contents for damage and retrieve any accompanying documentation.

Do not use a knife to open cardboard boxes - the contents may be located close to the surface, and can then be damaged by the blade.

Procedure

1 Check the carton before opening it to ensure it shows no signs of dropping, immersion in water or other mishandling.

   1 If external damage is detected, open the box to check its contents.

   2 Request that a representative of the carrier to be present while the box is opened, so any transportation damage can be identified and documented.

   3 If a unit has been damaged, prepare an inspection report stating the condition of the unit and actions taken.

     Describe the damage, and collect photographic evidence if possible. Return the inspection report to Kongsberg Mesotech as soon as possible.

2 Place the box on a stable work bench or on the floor with the top of the box facing upwards.

3 In the absence of other instructions, always open the top of the carton first.

   The contents of the box will normally have been lowered into the carton from above, so this will usually be the easiest route to follow. Be careful when you open the box, and make sure that the contents are not damaged. Do not use a knife to open cardboard boxes.

4 If the box has been closed using staples, remove the staples from the carton as you open it.

   This will reduce the possibilities of scratch injury to yourself and damage to the contents.

5 If a wooden box has been closed using screws, always remove them using a screwdriver.

   Do not attempt to force the lid open with a crowbar or similar tool.

6 Once the carton is open, carefully remove all loose packing and insulation material.

7 Check for user manuals and other documents that may have been added to the carton during packing.

8 Check also for special tools, door keys etc.

Repacking the Sonar Head

The Sonar Head comes in a hard-shell case.

Prerequisites

- All units and parts must be rinsed with fresh water and dried off before packing away.
- All cables must be disconnected and protective dust caps placed on all connectors.

Caution

The M3 Sonar Head's black polyurethane transducer is delicate. Always keep the Guard Ring and protective cover over the transducer during installation and storage. Store the Sonar Head in a cool, dry location away from ozone sources (such as electric motors or welders).

Procedure

1 Place the protective cover over the Sonar Head and Guard Ring and push down until secure.

2 Pack the Sonar Head (A) into the circular cutout of the foam insert in the hard-shell case.

3 Pack the cables and accessory kits into the side pocket (B) of the case.

Note

If you did not order a Sonar Processor from Kongsberg Mesotech, the USB flash drive goes here too.

4 Pack the *Quick Start Guide* and any other documentation you may have into the back pocket of the case (C).

Note

If you did not purchase any cables, a smaller equipment case is used. This small hard-shell case fits the Sonar Head and its accessory kit only.

Index

1000Base-T
Ethernet cable 117

A

about
comments 7
Connection status 21
constructive criticism 7
feedback 7
Head status 22
installation drawings 127
Log files 20
maintenance philosophy 15
Output Messages 19
purpose of this manual 7
registered trademarks 7
software license 7
software version 7
suggestions 7
target audience 7
after every use
preventive maintenance 54
anodes
inspecting and replacing the sacrificial anodes 70
anti-fouling paints
approved 73
International Marine Coatings 73
Jotun 73
approved
anti-fouling paints 73
approved anti-fouling paints 73
International Marine Coatings 73
Jotun 73
audience
this manual 7

B

basic cable requirements 123
before every survey
preventive maintenance 53
block
diagram 10
book
purpose 7
target audience 7

C

cable connections
requirements 126
cable connectors
inspecting and cleaning 62, 64
cable drawing
Ethernet cable RJ45 117
Seacon MIND-4-CCP 119
Seacon MINK-10-CCPL 118
Seacon MINK-10-CCPL (VDSL) 120
SeaNet 119
SubConn DIL13F 121
SubConn MCIL8F 121
SubConn MCOM6F 120
cable grounding
requirements 126
cable installation
requirements 124
cable plan 113
cable requirements
cable 123
cable connections 126
cable terminations 126
grounding 126
physical protection 125
radio frequency interference 125
cable terminations
requirements 126
cables
connection requirements 126
grounding requirements 126
list of system interconnection cables 114
procedures 76, 81, 84
protection 125
read this first 112
requirements for physical protection 125
requirements for radio frequency interference 125
spare part 106
termination requirements 126
verify correct connections 42
category
spare parts 104
changing IP Address
Sonar Head 49
characteristics
mechanical 144
performance 142
cleaning
display 56
Sonar Processor 57
comments
send us 7
communication formats
depth information 141
gyro information 139
heading information 139
motion information 140
position information 139
sound speed information 140
speed information 139
compatibility

Focal multiplexer 115
computer
minimum requirements 148
connecting
sonar head..... 33
connection
diagram..... 113
Ethernet cable 117
Connection status
about..... 21
description 21
connections
cable requirements..... 126
constructive criticism
send us..... 7
consumables
spare parts..... 109

D

datagram formats
depth information..... 141
gyro information 139
heading information 139
motion information 140
position information..... 139
sound speed information..... 140
speed information..... 139
definition
maintenance philosophy 15
depot level
maintenance philosophy 15
depth information
datagram formats 141
description
Connection status 21
Head status..... 22
Log files..... 20
maintenance philosophy 15
Output Messages..... 19
system 9
diagram
connections 113
wiring..... 113
dimensions
about..... 127
Sonar Head outline dimensions
drawing 128, 131, 134
display
cleaning 56
inspection 56
drawing
Ethernet cable RJ45 117
Sonar Head outline dimensions..... 128, 131, 134
system diagram..... 10
drawings
about..... 127

E

environmental
requirements..... 147
equipment handling..... 149
inspection 152
lifting units and transportation boxes 151
storage prior to installation 153
transportation..... 150
unpacking..... 154
visual inspection 152
Ethernet cable
installation 124
specifications 117
Ethernet interface
network adapter 46
every year
preventive maintenance..... 55

F

failure detection
Sonar Head connection..... 25
failure to display targets
troubleshooting..... 34
fault finding
Sonar Head 27
fault location
tools..... 18
feedback
send us..... 7
Focal multiplexer
compatibility 115
formats
processed data..... 141
functional
diagram..... 10

G

general safety rules 14
GPS information
datagram formats 139
grounding
cable requirements..... 126
Guard Ring
installing 59
gyro information
datagram formats 139

H

handling
transducers..... 66
Head status
about..... 22
description 22
heading information
datagram formats 139
high voltage

safety rules 14
how to
change the Sonar Head IP Address 49
connect to the sonar 33
inspect and clean the cable connectors 62, 64
inspect and clean the display 56
inspect and clean the Sonar Head 58
inspect and clean the Sonar Processor 57
inspect and replace the sacrificial anodes 70
install the Guard Ring 59
lift units and transportation boxes 151
repack the Sonar Head 156
replace the o-ring 76
replace the retaining ring 81
splice the cable 84
test the sonar and sensors 43
transport Kongsberg Mesotech equipment 150
troubleshoot a failure to display targets 34
troubleshoot reduced profiling performance 38
unpack standard parts and units 154
upgrade the Sonar Head 47
verify that all cables are properly connected 42
visual inspection of units and transportation boxes after arrival 152
hydrophone
anti-fouling paints 73

I

illustration
system diagram 10
important
transducer handling 66
information
high voltage 14
support 16
inspecting
sacrificial anodes 70
Sonar Processor 57
inspecting and cleaning
cable connectors 62, 64
Sonar Head 58
inspection
display 56
transportation boxes 152
units 152
installation
Ethernet cable 124
installation drawings
about 127
installation requirements
environmental 147
temperature 147
installing
Guard Ring 59
interconnection cables
list 114
interface
specifications 139
interface cables
verify correct connections 42
interference
cable requirements 125
intermediate level
maintenance philosophy 15
International Marine Coatings
anti-fouling paints 73
introduction
power supply 12
Sonar Head 13
Sonar Processor 12
IP address
network adapter 46
IP Address
network adapter 46

J

Jotun
anti-fouling paints 73

K

Kongsberg Mesotech
support 16

L

license
software 7
lifting
transportation boxes 151
unit 151
list
supported multiplexers 115
system interconnection cables 114
Log files
about 20
description 20

M

mains power
requirements 146
maintenance
depot 15
intermediate 15
organisational 15
preventive, schedule 53
maintenance philosophy 15
manual
purpose 7
target audience 7
mechanical
specifications 144
mechanical drawings
about 127
minimum requirements

computer 148
monthly
preventive maintenance 55
motion information
datagram formats 140
motion reference unit
datagram formats 140
Mounting brackets
spare part 110
MRU
datagram formats 140

N

network adapter
IP Address 46
IP address for transceiver communication 46
Subnet mask 46
NMEA datagrams
depth information 141
GPS information 139
gyro information 139
heading information 139
motion information 140
position information 139
sound speed information 140
speed information 139

O

office
support 16
once every year
preventive maintenance 55
order number
cables 106
Mounting brackets 110
Sonar Head 105
ordering
spare parts 104
organisational level
maintenance philosophy 15
outline dimensions
about 127
outline dimensions drawing
Sonar Head 128, 131, 134
Output Messages
about 19
description 19
overview
power supply 12
Sonar Head 13
Sonar Processor 12

P

part number
cables 106
Mounting brackets 110
power supply 108
Sonar Head 105
performance
specifications 142
peripheral systems
interface specifications 139
personnel
preventive maintenance tasks 56
physical protection
cable requirements 125
plan
cable 113
position information
datagram formats 139
power
requirements 146
specifications 146
power cables
verify correct connections 42
power supply
introduction 12
overview 12
part number 108
purpose 12
spare part 108
preventive maintenance
after every use 54
before every survey 53
every three months 55
every year 55
personnel qualifications 56
schedule 53
procedure
changing the Sonar Head IP Address 49
connecting to the sonar 33
inspecting and cleaning the cable connectors 62, 64
inspecting and cleaning the display 56
inspecting and cleaning the Sonar Head 58
inspecting and cleaning the Sonar Processor 57
inspecting and replacing the sacrificial anodes 70
installing the Guard Ring 59
lifting units and transportation boxes 151
repacking the Sonar Head 156
replacing the o-ring 76
replacing the retaining ring 81
splicing the cable 84
testing the sonar and sensors 43
transporting Kongsberg Mesotech equipment 150
troubleshooting a failure to display targets 34
troubleshooting reduced profiling performance 38
unpacking standard parts and units 154
upgrading the Sonar Head 47
verifying that all cables are properly connected 42
visual inspection of units and transportation boxes after arrival 152
procedures
cables 76, 81, 84
troubleshooting 32
processed data

formats 141
protection
cable requirements 125
publication
purpose 7
target audience 7
purpose
power supply 12
Sonar Head 13
Sonar Processor 12
this manual 7

Q

qualifications
preventive maintenance tasks 56

R

radio frequency interference
cable requirements 125
reader
this manual 7
reduced profiling performance
troubleshooting 38
registered trademarks 7
repacking
Sonar Head 156
replacing
sacrificial anodes 70
requirements
cable connections 126
cable grounding 126
cable installation 124
cable terminations 126
cables and wiring 123
computer 148
environmental 147
mains power 146
physical protection of cables 125
power 146
radio frequency interference 125
supply power 146
temperature 147
RF interference
cable requirements 125
RJ45
Ethernet cable 117
rules
safety 14
transducer handling 66

S

sacrificial anodes
inspecting and replacing 70
safety rules 14
schedule
preventive maintenance 53
sensors
interface specifications 139
software
license 7
version 7
sonar and sensors
testing 43
sonar head
anti-fouling paints 73
connecting 33
Sonar Head
changing IP Address 49
fault finding 27
inspecting and cleaning 58
introduction 13
outline dimensions drawing 128, 131, 134
overview 13
purpose 13
repacking 156
spare part 105
troubleshooting 27
upgrading 47
Sonar Head connection
failure detection 25
Sonar Processor
inspecting and cleaning 57
introduction 12
overview 12
purpose 12
Sonar Setup dialog box
connecting to the sonar 33
sound speed
datagram formats 140
sound speed information
datagram formats 140
sound speed sensor
datagram formats 140
spare part
cables 106
Mounting brackets 110
power supply 108
Sonar Head 105
spare part category
consumable 104
critical 104
non-critical 104
spare parts
consumables 109
ordering 104
tools 109
Spare Parts Interchangeability Record (SPIR) 104
specification
synchronization 141
specifications
Ethernet cable RJ45 117
interface capabilities 139
mechanical 144
performance 142
power 146
Seacon MIND-4-CCP 119

Seacon MINK-10-CCPL ... 118
Seacon MINK-10-CCPL (VDSL) ... 120
SeaNet cable ... 119
storage prior to installation ... 153
SubConn DIL13F ... 121
SubConn MCIL8F ... 121
SubConn MCOM6F ... 120
technical ... 138
speed information
datagram formats ... 139
storage
prior to installation ... 153
Subnet mask
network adapter ... 46
suggestions
send us ... 7
supply power
requirements ... 146
support information ... 16
supported multiplexers
list ... 115
synchronization
specification ... 141
system
description ... 9
diagram ... 10
system cables
description ... 112
list ... 114

T

target audience
this manual ... 7
technical
specifications ... 138
technical requirements
computer ... 148
mains power ... 146
power ... 146
supply power ... 146
technical specifications
interface specifications ... 139
temperature
requirements ... 147
terminations
cable requirements ... 126
testing
sonar and sensors ... 43
this manual
purpose ... 7
target audience ... 7
tools
spare parts ... 109
troubleshooting ... 18
trademarks
registered ... 7
transducer
anti-fouling paints ... 73
transducer handling
important rules ... 66
transportation
of delicate and fragile equipment ... 150
troubleshooting
failure to display targets ... 34
procedures ... 32
reduced profiling performance ... 38
Sonar Head ... 27
tools ... 18

U

unpacking
standard parts and units ... 154
upgrading
Sonar Head ... 47

V

version
software ... 7
view
Connection status description ... 21
Head status description ... 22
Log files description ... 20
Output Messages description ... 19
visual inspection
transportation boxes ... 152
units ... 152

W

wiring
diagram ... 113
list of system interconnection cables ... 114

©2020 Kongsberg Mesotech