1107 ALTIMETER

KONGSBERG

HIGH-RESOLUTION ALTIMETERS
FOR DEEP OCEAN APPLICATIONS

1107 SERIES ALTIMETERS
P/N 975-71100000-7804

An underwater or subsea altimeter is primarily used to measure the altitude (height) of an object above the seafloor. Kongsberg Mesotech's underwater altimeters are also suited to various other applications, including positioning, berthing, and below-surface monitoring. The underwater vehicle industry (ROVs and AUVs) is the primary user of altimeters.

HIGHLIGHTS

- Depth rating: 6000 m
- Robust design
- Small and lightweight
- NMEA DBT ouput
- Suitable for various applications, including positioning, berthing, height above seabed, and below-surface monitoring

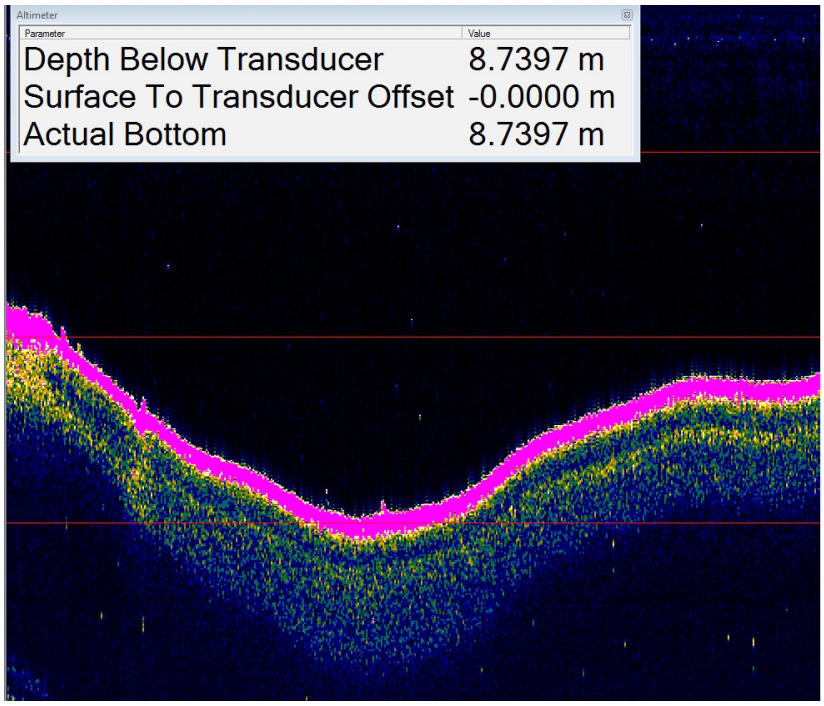

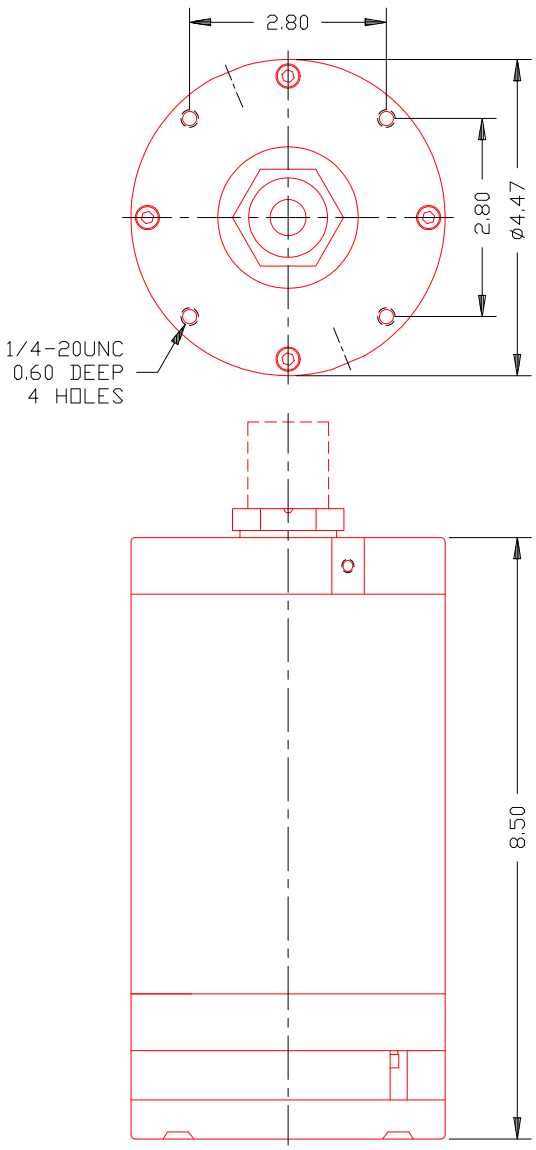

TECHNICAL SPECIFICATIONS

Operating frequency	200 kHz
Operating depth	6000 m
Beam width	10° nominal
Minimum range	0.61 m
Maximum range	100 m
Output resolution	25 mm
Range window	2 m
Transmit Pulse length	100 µs
Approx. repetition rate	6/sec
Assumed speed of sound	1478 m/s
Telemetry interface	Analog Output
Max. Range Output	4.88 V
Min. Range Output	0.03 V
Over Range Output	5.00 V
Receive bandwidth	20 kHz max.
Connector	Seacon XSG-4-BCL
Power requirements	+22 to +28 VDC @ 1.0 A startup, 250 mA continuous
Temperature range	-10 to +40°C operating, -30 to +50°C storage
Materials	Aluminium 6061-T6, 300-Series Stainless Steel, PVC, and Epoxy
Finish	Anodize, black MIL-A-8625 type 2
Dimensions	
Length	216 mm/8.50" (excludes connector)
Diameter	114 mm/4.47"
Weight (est.)	
in air	5.0 kg/11 lbs
in water	2.7 kg/6 lbs

Kongsberg Mesotech
1598 Kebet Way
Port Coquitlam, BC
Canada
V3C 5M5

Phone: 604-464-8144
Toll-Free: 1-888-464-1598
Fax: 604-941-5423

km.sales.vancouver@km.kongsberg.com

Specifications subject to change without notice